DiGi PROJECT POOL LIFT

# LIFT TECHNICAL FEATURES

MADE IN ITALY

# BLUPOOL

PORTABLE POOL LIFT

BLUPOOL is a portable medical device that represents an evolution of our bestseller BluOne in terms of design, technology and capacity, increased up to 140 kg. This lift has eight safety levels that allow the entrance into the water in a functional and safe way both for the operator and the end user. In addition to these, the lift can be equipped with: infrared ground detection system with acoustic alarm in case of excessive approach to the edge of the pool, remote control for lifting and lowering operations in autonomy, as well as the 4 or 5 point safety belt. As for the development of each product, DiGi Project has taken care to ensure all levels of safety for a safe, comfortable and functional water immersion.




DIGI PROJECT s.n.c. | Str. Provinciale Ovest, 15 46020 Pegognaga (MN) T +39 0376 550224 info@digiproject.biz www.digiproject.biz

## CERTIFICATIONS AND PATENT

Patent No. 1835878
Regulation EU 2017/745 Medical Devices – class 1 - DM 2562970/R
Directive 2006/42/EC - Machinery Directive
Directive 2004/108/EC - EMC Electromagnetic Compatibility

CE

## TECHNICAL DETAILS

Maximum capacity: 140 kg
Maximum travel: 1310 mm
Depth of seat inside the water: 730 mm
Time of lowering - lifting with weight into water: 20 sec
Weight of the lift: 150 kg
Battery: 24 V

## OPTIONAL

4-point safety belt
5-point safety belt
Handset for lifting and lowering
Infrared front hole sensor with acoustic signal
Protective cover
Custom-made ramp

POOL TYPE INSTALLATION SOLUTION

DECK-LEVEL TYPE




SKIMMER TYPE




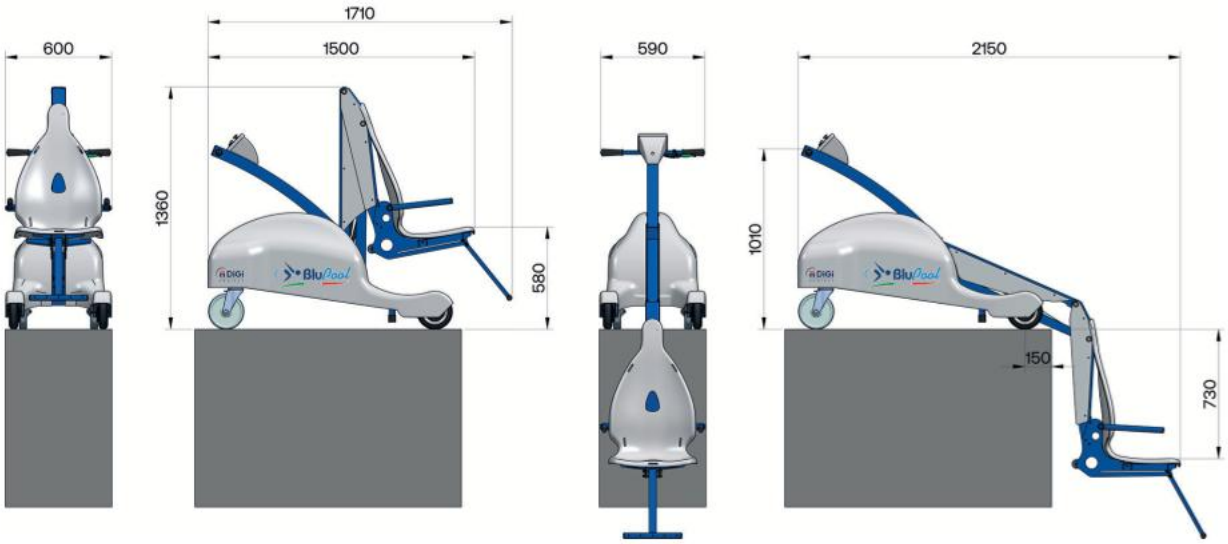


# **TECHNICAL** FEATURES

- Starter key on the control box
- Handbrake: up&down controls will not operate unless the handbrake is set
- Electrohydraulic box
- Emergency manual pump for use in case of power failure
- Front rubber safety stoppers
- Pivoting rear wheels
- Retractable footrest
- Adjustable armrests
- External battery charger
- Battery charge level indicator
- Emergency stop button
- Average autonomy: 50 working cycles
- 2-point safety belt
- Stainless steel frame for in-water parts
- Galvanization and powder coating

**DIGI PROJECT s.n.c.** | Str. Provinciale Ovest, 15 46020 Pegognaga (MN) T +39 0376 550224 info@digiproject.biz www.digiproject.biz