Forklift

C351H

TECHNICAL DATA

GENERAL		C351H x4
Load capacity to 500 mm	kg	3500
Load capacity to 600 mm	kg	3230
Unladen weight *	kg	5430
Transmission	-	Hydrostatic
MAST		
Fork carriage	-	FEM IIIB**
Carriage width	mm	1260/1660
ENGINE		
Make	-	KUBOTA
Model	-	V2403-CR E5B
Power	kW	31,2
Operating speed	rpm	2200
Torque	N·m@rpm	159,8@1600
No. cylinders	-	4
Emissions	-	Stage V, Tier 4
Ambient noise	dB(A)	104
DRIVING		
Max. speed	km/h	20
Gradability	%	35
Traction	-	4x4 FullGrip®
Front tyres	-	16/70-20
Rear tyres	-	12-16.5
HYDRAULIC SYSTEM		
Hydraulic circuit	-	Two gears pump
Flow rate	l/min	50
Working pressure	bar	200
TANK CAPACITY		
Fuel	l	62
Hydraulic	l	51
BRAKES		
Service	-	Hydraulic, multi-disc and sealed
Parking	-	Negativ, multi-disc and sealed

** It may change due to optional equipment ** Height measure is different from ISO 2328 standard measure*

DIMENSIONS

TYPE OF MAST	Maximum lift (mm)	H Retracted mast height (mm)	Extended mast height (mm)	Free lift (mm)	Load at maximum height @ 500 mm (kg) All-terrain use Narrow axle	Wide axle
Duplex mast (Std.)	3300	2670	4570	120	3500	-
Triplex mast	3700	2130	4970	1200	3500	-
Triplex mast	5400	2700	6670	1680	-	1400

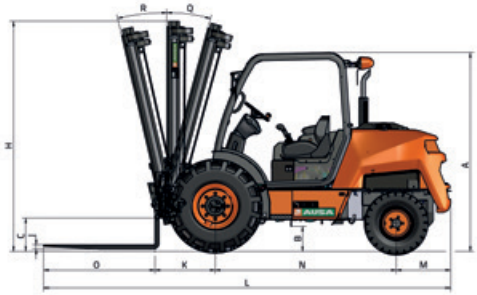

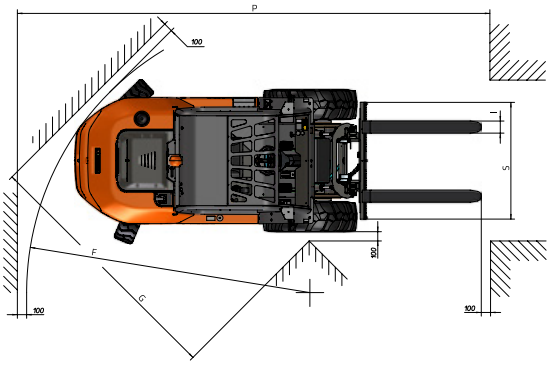

DIMENSIONS (mm)	C351H x4
A	2190
B	320
C	375
D	1645
E	1780
E*	2050
F	4350
G	3090
I	120
J	50
K	710
L	4540
M	615
N	2020
O	1200
P	6645
S	1310
S**	1710
DIMENSIONS (°)	
Q	11
R	12

** Dimensions with 4.30 m or 5.4 m triplex mast configuration.* *** Measured for wide axle carriage*

www.ausa.com

Products are subject to modifications without prior notice. Images throughout the spec sheet may refer to non-standard machines or non-available configurations depending on models.

AUSA's logo and corporate identity are property of the Company, they cannot be used without authorization.