AUSA

Forklift

C251H

TECHNICAL DATA

GENERAL		C251H x2	C251H x4
Load capacity to 500 mm	kg	2500	2500
Load capacity to 600 mm	kg	2295	2295
Unladen weight *	kg	4100	4255
Transmission	-	Hydrostatic	Hydrostatic
MAST			
Fork carriage	-	FEM IIB**	FEM IIB**
Carriage width	mm	1260/1660	1260/1660
ENGINE			
Make	-	KUBOTA	KUBOTA
Model	-	V2403-CR E5B	V2403-CR E5B
Power	kW	31,2	31,2
Operating speed	rpm	2200	2200
Torque	N·m@rpm	159,8@1600	159,8@1600
No. cylinders	-	4	4
Emissions	-	Stage V	Stage V
Ambient noise	dB(A)	104	104
DRIVING			
Max. speed	km/h	20	20
Gradability	%	25	38
Traction	-	4x2	4x4 FullGrip®
Front tyres	-	12.5/80-18	12.5/80-18
Rear tyres	-	7.00-12	10.0/75-15.3
HYDRAULIC SYSTEM			
Hydraulic circuit	-	Two gears pump	Two gears pump
Flow rate	l/min	50	50
Working pressure	bar	210	210
TANK CAPACITY			
Fuel	l	62	62
Hydraulic	l	51	51
BRAKES			
Service	-	Hydraulic, multi-disc and sealed	Hydraulic, multi-disc and sealed
Parking	-	Negativ, multi-disc and sealed	Negativ, multi-disc and sealed

** It may change due to optional equipment ** Height measure is different from ISO 2328 standard measure*

DIMENSIONS

TYPE OF MAST	Maximum lift (mm)	H Retracted mast height (mm)	Extended mast height (mm)	Free lift (mm)	Load at maximum height @ 500 mm (kg) All-terrain use Narrow axle	Wide axle
Duplex mast (Std.)	3300	2460	4220	120	2500	-
Triplex mast	3700	2120	4670	1130	1740	-
Triplex mast	4300	2300	5300	1330	-	2155
Triplex mast	5400	2690	6370	1680	-	1500

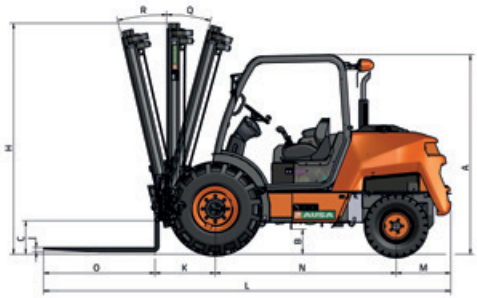

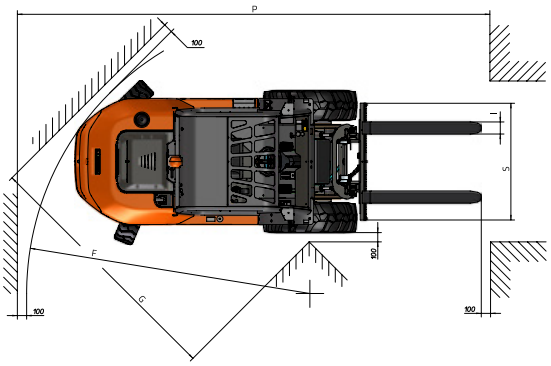

DIMENSIONS (mm)	C251H x2	C251H x4
A	2140	2150
B	270	275
C	360	334
D	1390	1547
E	1520	1520
E*	1780	1780
F	3020	4120
G	2760	2891
I	100	100
J	45	45
K	650	650
L	4385	4385
M	585	585
N	1950	1950
O	1200	1200
P	5100	6400
S	1260	1260
S**	1600	1600
DIMENSIONS (°)		
Q	11	11
R	12	12

** Dimensions with 4.30 m or 5.4 m triplex mast configuration.* *** Measured for wide axle carriage*

AUSA

www.ausa.com

Products are subject to modifications without prior notice. Images throughout the spec sheet may refer to non-standard machines or non-available configurations depending on models.

AUSA's logo and corporate identity are property of the Company, they cannot be used without authorization.