HELI

Reliable special designed instrument



- Neutral indicator
- Seat belt alarm
- Left turning indicator
- Oil lever gauge
- Seat switch
- Hour meter
- Low fuel lever alarm indicator
- Hand brake indicator
- Engine fault indicator (for electronic-controlled engine)
- Low pressure alarm indicator
- LPG Low Fuel Indicator & Light
- Right turning indicator
- Water temperature meter
- Maintainance alarm
- Clogged air filter
- Not charging alarm
- *High torque converter oil temperature alarm indicator

(Items with * are optional)

Standard configuration

Horn
Control valve
Wholly hydraulic-powered steering
Half surrounded seat
Backrest
Rear view mirror
Front combined lamp
Transmission oil filter
Engien flame out device
Rachet type parking brake
Driver's tools
Power brake
Rear combined lamp
Reversing buzzer
Tilt-lock valve
Tilt adjustable steering column
Overhear guard rain cover
OPS(travlling control system)
Standard fork
Integration electric box
Hydraulic circuit oil filter
Speed-limiting valve
Wide wiew mast
Air intaking device
Durable tire with decorative pattern
Lifting and tilting operation handles
Traction pin
Head lamp
Hydraulic oil dipstick
Overhead guard
Torque converter oil dipstick
Combined instrument
Electric-hydraulic direction changing

Optional

Driver's cab
Warning light
High air exhausting device
Double air cleaner
Suspension seat
Fork extension
Heater
Solid tyre
Widen fork carriage
Wind shield
Rear working light
Air condition(certain type)
Torque converter oil temperature meter
Tilting cylinder protection cover
User-specified color
Optional attachments
Double-tyre and protected device
Rotating seat for LPG
Over speed alarm
Counter weight protective screening
Rear View CameraOverhead guard top rain glass
SAE stardard
Engine hood locking
Thin-point type fork
Soundproof and noise reducing device
Universal key
Radiator protected screening
Tractor pin with mild steel safeguard
Overspeed alarm device
High temperature resistant device
Fuel tank with lock
Weighting device
Cab with skylight

ANHUI HELI CO., LTD.
Add / No.668, FangXing Road, Hefei, China
Fax / +86-551-63639966

Tel / +86-551-63639068(America); 63639258(Europe);
63639358(Asia); 63662105(Africa & Middle East);
63639530(Key Accounts Division); 63662105(Wheel loader)

* Our products are subject to improvements and changes without notice.

Catalog No.200727 Foxit Print

HELI

4-5 t

H3 series Internal Combustion Counterbalanced Forklift Truck



www.heliforklift.net

H3 SERIES 4-5 t

Technical features remarkably improved







Damping

- With suspension damping struction on overhead guard and optimized design for the transmission,the whole trucks's vibration reduced a lot and relieve driver's fatigue greatly

Noise reduction

- Equipped with optimize designed parts around the engine,noise nearby ear and the truck sound level are reduced greatly

Heat dissipation

- With the optimized cooling system and great cooling performance,highly improved the reliability and durability of the transmission and engine,etc, many key parts.

Efficiency

- With more power and low emission engine,stronger loading capacity,higher gradeability;With load sensing hydraulic system,quicker lifting speed,higher working efficiency

Reliability

- Strengthen and Optimize designed core structure parts,strength improved greatly;with intelligent gear shifting technology to avoid 2nd-gear start,improved transmission life

Comfort

- Intelligent gear shifting system,ease of operation Standard half surrounded seat,safety and comfort

Maintainability

- Wider internal space,more reasonable parts layout and 80°hood opening angle make maintenance easy







H3 SERIES 4-5 t

Manufacturer and technical parameters

	Character					
1.01	manufacturer			HELI		
1.02	model			CP (Q) YD40	CP (Q) YD45	CP (Q) YD50
1.03	rated capacity		kg	4000	4500	5000
1.04	load center		mm		500	500
1.05	operation mode		type		Seat-type	
	Dimensions					
2.01	Max.lifting height	H	mm	3000	3000	3000
2.02	Mast overall height(fork to the ground and mast be vertical)	H1	mm	2275	2275	2275
2.03	Max.fork lifting height(with backrest)	H2	mm	4250	4250	4250
2.04	Free lift height	H3	mm	150	150	150
2.05	Overall height(overhead guard)	H4	mm	2350	2350	2350
2.06	Min.groung clearance(at the mast)	H5	mm	175	175	175
2.07	Distance from the surface of the seat to the overahead guard	H6	mm	1020	1020	1020
2.08	Traction pin height	H9	mm	380	380	380
2.09	Backrest height(calculated from the surface of the fork)	H13	mm	1250	1250	1250
2.10	Overall length(with fork/without fork)	(L/L')	mm	4310/3240	4310/3240	4460/3240
2.11	Wheel base	L1	mm	2100	2100	2100
2.12	Front overhang	L2	mm	560	560	560
2.13	Rear overhang	L3	mm	580	580	580
2.14	Overall width	W1	mm	1510	1510	1510
2.15	Tread (front/rear)	(W3/W2)	mm	1230/1190	1230/1190	1230/1190
2.16	Fork adjustable range(the external of the fork)(Max./Min.)	W5	mm	1330/300	1330/300	1330/300
2.17	Min.turning radius(exterior)	r	mm	2810	2810	2810
2.18	Min.turning radius(interior)	r'	mm	215	215	215
2.19	Min.right angle aisle width	Ra	mm	3150	3150	3150
2.20	Min.right angle stacking aisle width	Ast	mm	4760	4760	4760
2.21	Mast tilting angle (front/rear)	α/β	deg	6°/12°	6°/12°	
2.22	Fork size	L4×W×T	mm	1070×150×50	1070×150×50	1220×150×50
	Weight					
3.01	Total weight		kg	6540	6740	7000
	Wheel and tyre					
4.01	Wheel number x = drive wheel (front/rear)				2X/2	
4.02	yre type(front/rear)				Pneumatic tyre	
4.03	Tyre size(front/rear)			8.25-15-14PR/7.00-12-12PR		300-15-18PR/7.00-12-12PR
4.04	Service brake				Hydraulic-Foot Pedal	
4.05	Parking brake				Mechanical-Hand Lever	

Performance							
Model		CPQYD40-KUH	CPQYD45-KUH	CPQYD50-KUH	CPYD40-KUH	CPYD45-KUH	CPYD50-KUH
Max.drawbar pull (Loaded/Unloaded)	kN	35/25	35/25	36/25	37/23	37/23	38/23
Max.Gradeability (Loaded/Unloaded)	%	21/30	21/29	21/27	21/30	21/29	21/27
Max.traveling speed (Loaded/Unloaded)	km/h	26/27					
Lifting Speed (Loaded/Unloaded)	mm/s	600/580					
Lowing Speed (Loaded/Unloaded)	mm/s	440/420					
Drive and transmission control device							
Engine mode		KUBOTA WG3800					
Engine rated power	kW/rpm	GAS:54.6/2400 LPG:54.6/2400		LPG:63.2/2400			
Engine rated torque	Nm/rpm	GAS:246.8/1400 LPG:271.4/1400		LPG:282.4/1200			
Engine cylinder number-bore x stroke		4-100×120					
piston displacement	L	3.77					
Engine type		GAS/LPG		LPG			
Engine Emissions		EPA/CARB,EUstage V					
Battery(Voltage/Capacity)	V/Ah	12/80					
Engine fuel tank capacity	L	90					
Tranmission box shifting gears(front/rear type)		2-1Power Shift T/M					

Note:*stands for theoretical calculating value.

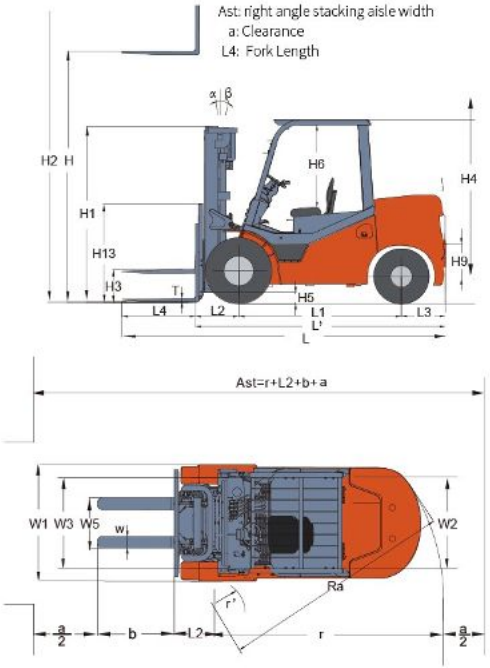

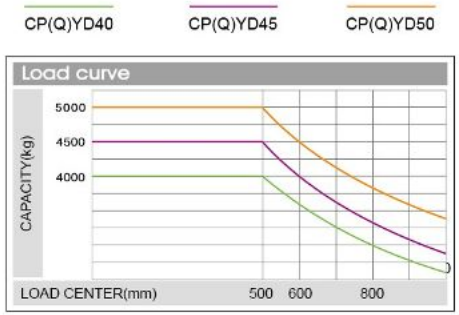

Note: The vertical axis stands for load capacity and the horizontal axis stands for load center which is calculated from the front of the fork. The base point of the standard load refers to the center position of the cube with 1000mm length of side. When mast is tilted forward, nonstandard fork usage or load with over wide goods, load capacity will be reduced. Different load capacity in different load center can be known in time through load chart.

WIDE VIEW MAST

Mast model	Max. lifting height mm	Load capacity (load center 500mm) Kg			Overall Height (fork to the ground) (mm)	Free lift height (With Backrest) (mm)	Service Weight(unload)Kg			Mast tilting angle (°) α/β
		CP(Q)YD40	CP(Q)YD45	CP(Q)YD50			CP(Q)YD40	CP(Q)YD45	CP(Q)YD60	
M260	2600	4000	4500	5000	2075	150	6510	6710	6970	6°/12°
M270	2700	4000	4500	5000	2125	150	6520	6720	6980	6°/12°
M300	3000	4000	4500	5000	2275	150	6540	6740	7000	6°/12°
M330	3300	4000	4500	5000	2425	150	6560	6760	7020	6°/12°
M350	3500	4000	4500	5000	2525	150	6580	6780	7040	6°/12°
M370	3700	4000	4500	5000	2625	150	6590	6790	7050	6°/12°
M375	3750	4000	4500	5000	2650	150	6600	6800	7060	6°/12°
M400	4000	4000	4500	5000	2825	150	6610	6810	7070	6°/6°
M425	4250	*3800	*4200	*4700	2950	150	6670	6870	7130	6°/6°
M450	4500	*3700	*4200	*4700	3075	150	6680	6880	7140	6°/6°
M475	4750	*3700	*4200	*4700	3200	150	6700	6900	7160	6°/6°
M500	5000	*3400	*4000	*4200	3325	150	6720	6920	7180	6°/6°
M550	5500	*3200	*3800	*3800	3575	150	6730	6930	7190	3°/6°
M600	6000	*2900	*3200	*3600	3825	150	6750	6950	7210	3°/6°

Note: (1) *stands for the rated capacity when the front tyre is double-tyre.

(2) When the front tyre of the 2-3.5t truck is double tyre, the service weight of the truck is the weight in the table plus 110kg.

WIDE VIEW FULL FREE 2-STAGE MAST

Mast model	Max. lifting height mm	Load capacity (load center 500mm) Kg			Overall Height (fork to the ground) (mm)	Free lift height (With Backrest) (mm)	Service Weight(unload)Kg			Mast tilting angle (°) α/β
		CP(Q)YD40	CP(Q)YD45	CP(Q)YD50			CP(Q)YD40	CP(Q)YD45	CP(Q)YD60	
ZM261	2610	4000	4500	5000	2110	530	6615	6815	7075	6°/12°
ZM271	2710	4000	4500	5000	2160	580	6640	6840	7100	6°/12°
ZM300	3000	4000	4500	5000	2305	725	6690	6890	7150	6°/12°
ZM330	3300	4000	4500	5000	2455	875	6705	6905	71665	6°/12°
ZM350	3500	4000	4500	5000	2555	975	6715	6915	7175	6°/12°
ZM375	3750	4000	4500	5000	2680	1100	6730	6930	7190	6°/12°
ZM400	4000	4000	4500	5000	2805	1225	6745	6945	7205	6°/6°
ZM450	4500	*3700	*4200	*4500	3055	1475	6770	6970	7230	6°/6°
ZM500	5000	*3400	*4000	*4200	3305	1725	6805	7005	7265	6°/6°
ZM550	5500	*3200	*3800	*3800	3555	1975	6830	7030	7290	3°/6°
ZM600	6000	*2900	*3200	*3600	3805	2225	6855	7055	7315	3°/6°

Note: (1) *stands for the rated capacity when the fronttire is double-tire

(2)When the fronttire of the 8000-10000lbs truck is double tire,the service weight of the truck is the weight in the table plus 300lbs

(3)The free lifting height (without backrest)of the 8000-10000lbs truck is the height (without backrest) in the table plus 325mm

WIDE VIEW FULL FREE 3-STAGE MAST

Mast model	Max. lifting height mm	Load capacity (load center 500mm) Kg			Overall Height (fork to the ground) (mm)	Free lift height (With Backrest) (mm)	Service Weight(unload)Kg			Mast tilting angle (°) α/β
		CP(Q)YD40	CP(Q)YD45	CP(Q)YD50			CP(Q)YD40	CP(Q)YD45	CP(Q)YD60	
ZSM392	3920	*3840	*4350	*4800	2250	650	6880	7080	7340	6°/6°
ZSM435	4350	*3800	*4300	*4800	2395	795	6900	7100	7360	6°/6°
ZSM450	4500	*3950	*4000	*4300	2445	845	6920	7120	7380	6°/6°
ZSM470	4700	*3400	*4200	*4600	2515	955	6940	7140	7400	6°/6°
ZSM480	4800	*3250	*3800	*4000	2545	990	6950	7150	7410	6°/6°
ZSM500	5000	*3150	*3700	*3750	2645	1040	6970	7170	7430	6°/6°
ZSM540	5400	*3050	*3400	*3800	2760	1165	7010	7210	7470	6°/6°
ZSM600	6000	*2900	*3000	*3400	3010	1405	7090	7290	7550	3°/6°

Note: (1) *stands for the rated capacity when the fronttire is double-tire

(2)When the fronttire of the 8000-10000lbs truck is double tire,the service weight of the truck is the weight in the table plus 300lbs

(3)The free lifting height (without backrest)of the 8000-10000lbs truck is the height (without backrest) in the table plus 325mm