HELI
Handling Electric Logistics Intelligent

Option Table		
Project		Configuration
Intelligent Security	Electro-hydraulic directional transmission	●
	Full set of OPS	○
	Stamping special-shaped overhead guard	●
	Tilt cylinder self-locking valve	●
	Heli intelligent fleet management system	○
	Foldback prefilter	○
	main power switch	○
	Fuel tank cap with lock	●
	Fire extinguisher	○
Comfort & Convenience	Full suspension seat	○
	Suspended overhead guard	●
	Descent buffer	●
	Front and rear adjustable steering column	●
	Reversing horn handle	○
	USB interface	○
	Instrument identification	○
	Electric fan	○
	Reversing voice horn	○
	Meet the latest emission power (National IV/National III)	●
	Load-sensing steering	●
	Full LCD instrument	●
	High exhaust	●
Cab	Front windshield	○
	Rear windshield	○
	Overhead guard	●
	Integral cab	○
	Integral cab (installed with heater)	○
	Integral cab (installed with heater & cooling air conditioner)	○
	Integral cab (installed with cooling air conditioner)	○

Option Table		
Project		Configuration
Lamplight	LED lights	●
	LED rear working lights (2 pcs)	○
	Warning light (rotating)	○
	Warning light (rotating buzzer)	○
	Warning light (flashing)	○
	Blue light	○
Lifting System	Basic mast	●
	Full free mast (2-stage or 3-stage)	○
	Non-standard attachments	○
	Mast height	○
	Fork arm carrier	○
	Load-backrest	○
Other	Metric thread	●
	American standard thread	○
	Solid tire	○
	Tilt cylinder sheath	○
	Steering cylinder sheath	●
	Universal key	○
	Customized colors	○

Note: Standard●;Optional○.

ANHUI HELI CO., LTD.
Add / No.668, FangXing Road, Hefei, China
Fax / +86-551-63639966
Tel / +86-551-63639068(America); 63639258(Europe); 63639358(Asia);
63662105(Africa & Middle East); 63639530(Overseas Marketing)

Linked in YouTube Facebook

* Our products are subject to improvements and changes without notice.

FIC(G3RT)009 EN
Design&Print:Fokeli Printing 20220711

www.heliforklift.net

HELI

CPCD 20/25/30/35

W11Y2G3 2WD / **QC2Y2G3** 2WD / **XC6Y2G3** 2WD / **KU1Y2G3** 2WD
W3Y2G3 2WD / **W4Y2G3** 2WD / **XC3Y2G3** 2WD / **KU5Y2G3** 2WD
W3Y4G3 4WD / **W4Y4G3** 4WD / **XC3Y4G3** 4WD / **KU5Y4G3** 4WD



2-3.5 t

G3 series Internal Combustion Counterbalanced Rough Terrain Forklift Truck

HELI



Rough Terrain
Forklift Truck




Off-road wide base tires with large treads




Radiator

SUPERIOR DESIGN

- Fashionable and Aesthetic streamlined design
- Stable and reliable performance
- Dual drive or four-wheel drive off-road tires
- Widely used in fields, farms, orchards and other tough road conditions

Powerful & Efficient

- Multi-position gearbox with flexible connection;
- Dual drive or four-wheel drive, energy conservative and high efficient;
- Flexible connected drive axle with ultrahigh configuration;
- Greatly improved off-road performance hydraulic system with load sensing valve, faster lifting speed;
- Lightweight mast, widened frame and upper beam of optimized design high carrying capacity.

Stable & Reliable

- Off-road wide base tires with large treads;
- Improved radiator structure, optimized cooling system, better heat dissipation performance;


Pedal Mechanism


Transmission System



Meter

- In-position sensing system,effectively avoid misoperation;
- Optimized drive line system, larger ground clearance, lower center of gravity, improved stability and passability;
- Pedal mechanism optimization: inching pedal is connected to inching valve directly;
- Ip65 digital lcd meter;
- Sealing structure of 24 cone rubber hose, add “0” type sealing ring, better sealing effect.

Enjoyable Driving Experience

Triple suspension support design

Super wide view mast

More room for leg



Overhead Guard



High exhaust design



Mast with decline buffer function









Ergonomic instrument panel: integrated handle switch, ratchet type hand brake and integrated electro-hydraulic reversing handle

Easy to Maintain



LED lamps, energy efficient, long life, no maintenance



Modular high protection electrical box

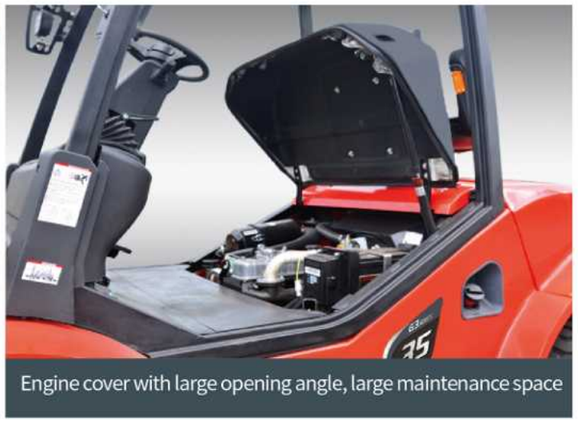

Engine cover with large opening angle, large maintenance space

	Manufacturer and Technical Data (2-2.5t Standard Dual drive)											
	Characteristics											
1.01	Manufacturer			HELI								
1.02	Model			CPCD20	CPCD20	CPCD20	CPCD20	CPCD25	CPCD25	CPCD25	CPCD25	
1.03	Configuration number			W11Y2G3(2WD)	QC2Y2G3(2WD)	XC6Y2G3(2WD)	KU1Y2G3(2WD)	W11Y2G3(2WD)	QC2Y2G3(2WD)	XC6Y2G3(2WD)	KU1Y2G3(2WD)	
1.04	Rated capacity		kg	2000				2500				
1.05	Load center distance		mm	500				500				
1.06	Power mode			Diesel				Diesel				
1.07	Driving mode			Seat-type				Seat-type				
	Weight											
2.01	Total weight		kg	4500				4650				
	Tyres											
3.01	Tyre type			Tubeless tyre				Tubeless tyre				
3.02	Wheel numbers front/rear(x=driven wheels)			2x/2				2X/2				
3.03	Tyre size, front			14-17.5-16TL				14-17.5-16TL				
3.04	Tyre size, rear			10-16.5-10TL				10-16.5-10TL				
	Dimensions											
4.01	Lifting height	H	mm	3000				3000				
4.02	Mast height (fork to the ground, vertical mast)	H1	mm	2265				2265				
4.03	Max. height, extended(with backrest)	H2	mm	4040				4040				
4.04	Free lifting height	H3	mm	160				160				
4.05	Height of overhead guard	H4	mm	2450				2450				
4.06	Min. ground clearance	H5	mm	280				280				
4.07	Height of backrest	H13	mm	1010				1010				
4.08	Overall length (with/without fork)	L/L'	mm	4210/3140				4210/3140				
4.09	Wheel base	L1	mm	2000				2000				
4.10	Front overhang	L2	mm	580				580				
4.11	Rear overhang	L3	mm	560				560				
4.12	Overall width	W1	mm	1640				1640				
4.13	Track width (front/rear)	W3	mm	1230/1280				1230/1280				
4.14	Adjustment range of fork (outside fork Max./Min.)	W5	mm	1345/250				1345/250				
4.15	Min. outside turning radius	r	mm	3400				3400				
4.16	Mast tilt angle (forward/backward)	α/β	°	10°/12°				10°/12°				
4.17	Fork size: thickness*width*length	TxWxL4	mm	40x122x1070				40x122x1070				
4.18	Min. right-angle aisle width	Ra	mm	3300				3300				
	Performance											
5.01	Travel speed (laden/unladen)		km/h	18/18				18/18				
5.02	Lift speed (laden/unladen)		mm/s	480/520				480/520				
5.03	Lowering speed (laden/unladen)		mm/s	370/350				370/350				
5.04	Max. drawbar pull (laden/unladen)		kN	18				18				
5.05	Max. gradeability (laden/unladen)		%	24				22				
	Combustion-Engine											
6.01	Engine manufacturer/Model			ISUZU 4JG2PE-01	QUANCHAI V32-50C42	XINCHAI 4D32X41	KUBOTA V2403-CR-TE5B	ISUZU 4JG2PE-01	QUANCHAI V32-50C42	XINCHAI 4D32X41	KUBOTA V2403-CR-TE5B	
6.02	Rated power/speed		kW/rpm	44.9/2450	36.8/2500	36.8/2500	42.6/2400	44.9/2450	36.8/2500	36.8/2500	42.6/2400	
6.03	Max. torque speed		Nm/rpm	186.3/1600-1800	200/1500-1800	210/1600-1800	195.6/1500	186.3/1600-1800	200/1500-1800	210/1600-1800	195.6/1500	
6.04	Cylinder number- bore * stroke		/L	4-95.4x107/3.059	4-98x105/3.17	4-98x105/3.168	4-87x102.4/2.434	4-95.4x107/3.059	4-98x105/3.17	4-98x105/3.168	4-87x102.4/2.434	
6.05	Emission			China Stage II	China Stage IV	China Stage IV	EU StageV / EPA Tier IV	China Stage II	China Stage IV	China Stage IV	EU StageV / EPA Tier IV	
6.06	Transmission gears (front/rear)			1-1Power Shift M/T				1-1Power Shift M/T				

	Manufacturer and Technical Data (3-3.5t Standard Dual drive)											
	Characteristics											
1.01	Manufacturer			HELI								
1.02	Model			CPCD30	CPCD30	CPCD30	CPCD30	CPCD35	CPCD35	CPCD35	CPCD35	
1.03	Configuration number			W11Y2G3(2WD)	QC2Y2G3(2WD)	XC6Y2G3(2WD)	KU1Y2G3(2WD)	W11Y2G3(2WD)	QC2Y2G3(2WD)	XC6Y2G3(2WD)	KU1Y2G3(2WD)	
1.04	Rated capacity		kg	3000				3500				
1.05	Load center distance		mm	500				500				
1.06	Power mode			Diesel				Diesel				
1.07	Driving mode			Seat-type				Seat-type				
	Weight											
2.01	Total weight		kg	5000				5200				
	Tyres											
3.01	Tyre type			Tubeless tyre				Tubeless tyre				
3.02	Wheel numbers front/rear(x=driven wheels)			2x/2				2X/2				
3.03	Tyre size, front			14-17.5-16TL				14-17.5-16TL				
3.04	Tyre size, rear			10-16.5-10TL				10-16.5-10TL				
	Dimensions											
4.01	Lifting height	H	mm	3000				3000				
4.02	Mast height (fork to the ground, vertical mast)	H1	mm	2265				2265				
4.03	Max. height, extended(with backrest)	H2	mm	4225				4225				
4.04	Free lifting height	H3	mm	160				160				
4.05	Height of overhead guard	H4	mm	2450				2450				
4.06	Min. ground clearance	H5	mm	280				280				
4.07	Height of backrest	H13	mm	1155				1155				
4.08	Overall length (with/without fork)	L/L'	mm	4214/3144				4254/3184				
4.09	Wheel base	L1	mm	2000				2000				
4.10	Front overhang	L2	mm	584				584				
4.11	Rear overhang	L3	mm	560				600				
4.12	Overall width	W1	mm	1640				1640				
4.13	Track width (front/rear)	W3	mm	1230/1280				1230/1280				
4.14	Adjustment range of fork (outside fork Max./Min.)	W5	mm	1395/250				1395/250				
4.15	Min. outside turning radius	r	mm	3400				3450				
4.16	Mast tilt angle (forward/backward)	α/β	°	10°/12°				10°/12°				
4.17	Fork size: thickness*width*length	TxWxL4	mm	45x125x1070				50x125x1070				
4.18	Min. right-angle aisle width	Ra	mm	3450				3500				
	Performance											
5.01	Travel speed (laden/unladen)		km/h	18/18				18/18				
5.02	Lift speed (laden/unladen)		mm/s	480/520				480/520				
5.03	Lowering speed (laden/unladen)		mm/s	370/350				370/350				
5.04	Max. drawbar pull (laden/unladen)		kN	18				18				
5.05	Max. gradeability (laden/unladen)		%	20				18				
	Combustion-Engine											
6.01	Engine manufacturer/Model			ISUZU 4JG2PE-01	QUANCHAI V32-50C42	XINCHAI 4D32X41	KUBOTA V2403-CR-TE5B	ISUZU 4JG2PE-01	QUANCHAI V32-50C42	XINCHAI 4D32X41	KUBOTA V2403-CR-TE5B	
6.02	Rated power/speed		kW/rpm	44.9/2450	36.8/2500	36.8/2500	42.6/2400	44.9/2450	36.8/2500	36.8/2500	42.6/2400	
6.03	Max. torque speed		Nm/rpm	186.3/1600-1800	200/1500-1800	210/1600-1800	195.6/1500	186.3/1600-1800	200/1500-1800	210/1600-1800	195.6/1500	
6.04	Cylinder number- bore * stroke		/L	4-95.4x107/3.059	4-98x105/3.17	4-98x105/3.168	4-87x102.4/2.434	4-95.4x107/3.059	4-98x105/3.17	4-98x105/3.168	4-87x102.4/2.434	
6.05	Emission			China Stage II	China Stage IV	China Stage IV	EU StageV / EPA Tier IV	China Stage II	China Stage IV	China Stage IV	EU StageV / EPA Tier IV	
6.06	Transmission gears (front/rear)			1-1Power Shift M/T				1-1Power Shift M/T				

Manufacturer and Technical Data (2-2.5t High Performance Dual drive)

	Characteristics										
1.01	Manufacturer			HELI							
1.02	Model			CPCD20	CPCD20	CPCD20	CPCD20	CPCD25	CPCD25	CPCD25	CPCD25
1.03	Configuration number			W3Y2G3(2WD)	W4Y2G3(2WD)	XC3Y2G3(2WD)	KU5Y2G3(2WD)	W3Y2G3(2WD)	W4Y2G3(2WD)	XC3Y2G3(2WD)	KU5Y2G3(2WD)
1.04	Rated capacity		kg	2000				2500			
1.05	Load center distance		mm	500				500			
1.06	Power mode			Diesel				Diesel			
1.07	Driving mode			Seat-type				Seat-type			
	Weight										
2.01	Total weight		kg	4500				4750			
	Tyres										
3.01	Tyre type			Tubeless tyre				Tubeless tyre			
3.02	Wheel numbers front/rear(x=driven wheels)			2x/2				2X/2			
3.03	Tyre size, front			14-17.5-16TL				14-17.5-16TL			
3.04	Tyre size, rear			10-16.5-10TL				10-16.5-10TL			
	Dimensions										
4.01	Lifting height	H	mm	3000				3000			
4.02	Mast height (fork to the ground, vertical mast)	H1	mm	2265				2265			
4.03	Max. height, extended(with backrest)	H2	mm	4040				4040			
4.04	Free lifting height	H3	mm	160				160			
4.05	Height of overhead guard	H4	mm	2450				2450			
4.06	Min. ground clearance	H5	mm	280				280			
4.07	Height of backrest	H13	mm	1010				1010			
4.08	Overall length (with/without fork)	L/L'	mm	4210/3140				4210/3140			
4.09	Wheel base	L1	mm	2000				2000			
4.10	Front overhang	L2	mm	580				580			
4.11	Rear overhang	L3	mm	560				560			
4.12	Overall width	W1	mm	1640				1640			
4.13	Track width (front/rear)	W3	mm	1250/1280				1250/1280			
4.14	Adjustment range of fork (outside fork Max./Min.)	W5	mm	1395/250				1395/250			
4.15	Min. outside turning radius	r	mm	3250				3250			
4.16	Mast tilt angle (forward/backward)	α/β	°	10°/12°				10°/12°			
4.17	Fork size: thickness*width*length	TxWxL4	mm	40x122x1070				40x122x1070			
4.18	Min. right-angle aisle width	Ra	mm	3300				3300			
	Performance										
5.01	Travel speed (laden/unladen)		km/h	20/20				20/20			
5.02	Lift speed (laden/unladen)		mm/s	480/520				480/520			
5.03	Lowering speed (laden/unladen)		mm/s	370/350				370/350			
5.04	Max. drawbar pull (laden/unladen)		kN	38	34	38	38	38	34	38	38
5.05	Max. gradeability (laden/unladen)		%	50	46	50	50	46	42	46	46
	Combustion-Engine										
6.01	Engine manufacturer/Model			ISUZU 4JG2PE-01	ISUZUGK-4JG2NKFC01	XINCHAI 4D32X41	KUBOTA V2403-CR-TESB	ISUZU 4JG2PE-01	ISUZUGK-4JG2NKFC01	XINCHAI 4D32X41	KUBOTA V2403-CR-TESB
6.02	Rated power/speed		kW/rpm	44.9/2450	35/2450	36.8/2500	42.6/2400	44.9/2450	35/2450	36.8/2500	42.6/2400
6.03	Max. torque speed		Nm/rpm	186.3/1600-1800	170/1700	210/1600-1800	195.6/1500	186.3/1600-1800	170/1700	210/1600-1800	195.6/1500
6.04	Cylinder number- bore * stroke		/L	4-95.4x107/3.059	4-95.4x107/3.059	4-98x105/3.168	4-87x102.4/2.434	4-95.4x107/3.059	4-95.4x107/3.059	4-98x105/3.168	4-87x102.4/2.434
6.05	Emission			China Stage II	Euro Stage IIIA	China Stage IV	EU StageV / EPA Tier IV	China Stage II	Euro Stage IIIA	China Stage IV	EU StageV / EPA Tier IV
6.06	Transmission gears (front/rear)			2-1Power Shift M/T				2-1Power Shift M/T			

Manufacturer and Technical Data (2-2.5t Standard 4-wheel Drive)

	Characteristics										
1.01	Manufacturer			HELI							
1.02	Model			CPCD20	CPCD20	CPCD20	CPCD20	CPCD25	CPCD25	CPCD25	CPCD25
1.03	Configuration number			W3Y4G3(4WD)	W4Y4G3(4WD)	XC3Y4G3(4WD)	KU5Y4G3(4WD)	W3Y4G3(4WD)	W4Y4G3(4WD)	XC3Y4G3(4WD)	KU5Y4G3(4WD)
1.04	Rated capacity		kg	2000				2500			
1.05	Load center distance		mm	500				500			
1.06	Power mode			Diesel				Diesel			
1.07	Driving mode			Seat-type				Seat-type			
	Weight										
2.01	Total weight		kg	4800				4950			
	Tyres										
3.01	Tyre type			Tubeless tyre				Tubeless tyre			
3.02	Wheel numbers front/rear(x=driven wheels)			2x/2				2X/2			
3.03	Tyre size, front			14-17.5-16TL				14-17.5-16TL			
3.04	Tyre size, rear			10-16.5-10TL				10-16.5-10TL			
	Dimensions										
4.01	Lifting height	H	mm	3000				3000			
4.02	Mast height (fork to the ground, vertical mast)	H1	mm	2265				2265			
4.03	Max. height, extended(with backrest)	H2	mm	4040				4040			
4.04	Free lifting height	H3	mm	160				160			
4.05	Height of overhead guard	H4	mm	2450				2450			
4.06	Min. ground clearance	H5	mm	280				280			
4.07	Height of backrest	H13	mm	1010				1010			
4.08	Overall length (with/without fork)	L/L'	mm	4210/3140				4210/3140			
4.09	Wheel base	L1	mm	2000				2000			
4.10	Front overhang	L2	mm	580				580			
4.11	Rear overhang	L3	mm	560				560			
4.12	Overall width	W1	mm	1640				1640			
4.13	Track width (front/rear)	W3	mm	1250/1280				1250/1280			
4.14	Adjustment range of fork (outside fork Max./Min.)	W5	mm	1395/250				1395/250			
4.15	Min. outside turning radius	r	mm	3400				3400			
4.16	Mast tilt angle (forward/backward)	α/β	°	10°/12°				10°/12°			
4.17	Fork size: thickness*width*length	TxWxL4	mm	40x122x1070				40x122x1070			
4.18	Min. right-angle aisle width	Ra	mm	3450				3450			
	Performance										
5.01	Travel speed (laden/unladen)		km/h	20/20				20/20			
5.02	Lift speed (laden/unladen)		mm/s	480/520				480/520			
5.03	Lowering speed (laden/unladen)		mm/s	370/350				370/350			
5.04	Max. drawbar pull (laden/unladen)		kN	38	34	38	38	38	34	38	38
5.05	Max. gradeability (laden/unladen)		%	50	46	50	50	46	42	46	46
	Combustion-Engine										
6.01	Engine manufacturer/Model			ISUZU 4JG2PE-01	ISUZU GK-4JG2NKFC01	XINCHAI 4D32X41	KUBOTA V2403-CR-TESB	ISUZU 4JG2PE-01	ISUZU GK-4JG2NKFC01	XINCHAI 4D32X41	KUBOTA V2403-CR-TESB
6.02	Rated power/speed		kW/rpm	44.9/2450	35/2450	36.8/2500	42.6/2400	44.9/2450	35/2450	36.8/2500	42.6/2400
6.03	Max. torque speed		Nm/rpm	186.3/1600-1800	170/1700	210/1600-1800	195.6/1500	186.3/1600-1800	170/1700	210/1600-1800	195.6/1500
6.04	Cylinder number- bore * stroke		/L	4-95.4x107/3.059	4-95.4x107/3.059	4-98x105/3.168	4-87x102.4/2.434	4-95.4x107/3.059	4-95.4x107/3.059	4-98x105/3.168	4-87x102.4/2.434
6.05	Emission			China Stage II	Euro Stage IIIA	China Stage IV	EU StageV / EPA Tier IV	China Stage II	Euro Stage IIIA	China Stage IV	EU StageV / EPA Tier IV
6.06	Transmission gears (front/rear)			2-1Power Shift M/T				2-1Power Shift M/T			

	Manufacturer and Technical Data (3-3.5t High Performance Dual drive)											
	Characteristics											
1.01	Manufacturer			HELI								
1.02	Model			CPCD30	CPCD30	CPCD30	CPCD30	CPCD35	CPCD35	CPCD35	CPCD35	
1.03	Configuration number			W3Y2G3(2WD)	W4Y2G3(2WD)	XC3Y2G3(2WD)	KU5Y2G3(2WD)	W3Y2G3(2WD)	W4Y2G3(2WD)	XC3Y2G3(2WD)	KU5Y2G3(2WD)	
1.04	Rated capacity		kg	3000				3500				
1.05	Load center distance		mm	500				500				
1.06	Power mode			Diesel				Diesel				
1.07	Driving mode			Seat-type				Seat-type				
	Weight											
2.01	Total weight		kg	5100				5300				
	Tyres											
3.01	Tyre type			Tubeless tyre				Tubeless tyre				
3.02	Wheel numbers front/rear(x=driven wheels)			2x/2				2x/2				
3.03	Tyre size, front			14-17.5-16TL				14-17.5-16TL				
3.04	Tyre size, rear			10-16.5-10TL				10-16.5-10TL				
	Dimensions											
4.01	Lifting height	H	mm	3000				3000				
4.02	Mast height (fork to the ground, vertical mast)	H1	mm	2265				2265				
4.03	Max. height, extended(with backrest)	H2	mm	4225				4225				
4.04	Free lifting height	H3	mm	160				160				
4.05	Height of overhead guard	H4	mm	2450				2450				
4.06	Min. ground clearance	H5	mm	280				280				
4.07	Height of backrest	H13	mm	1175				1175				
4.08	Overall length (with/without fork)	L/L'	mm	4214/3144				4259/3189				
4.09	Wheel base	L1	mm	2000				2000				
4.10	Front overhang	L2	mm	584				584				
4.11	Rear overhang	L3	mm	560				600				
4.12	Overall width	W1	mm	1640				1640				
4.13	Track width (front/rear)	W3	mm	1250/1280				1250/1280				
4.14	Adjustment range of fork (outside fork Max./Min.)	W5	mm	1395/250				1395/250				
4.15	Min. outside turning radius	r	mm	3400				3450				
4.16	Mast tilt angle (forward/backward)	α/β	°	10°/12°				10°/12°				
4.17	Fork size: thickness*width*length	TxWxL4	mm	45×125×1070				50×125×1070				
4.18	Min. right-angle aisle width	Ra	mm	3300				3350				
	Performance											
5.01	Travel speed (laden/unladen)		km/h	20/20				20/20				
5.02	Lift speed (laden/unladen)		mm/s	450/520				450/520				
5.03	Lowering speed (laden/unladen)		mm/s	370/350				370/350				
5.04	Max. drawbar pull (laden/unladen)		kN	38	34	38	38	38	34	38	38	
5.05	Max. gradeability (laden/unladen)		%	40	36	40	40	36	32	36	36	
	Combustion-Engine											
6.01	Engine manufacturer/Model			ISUZU 4JG2PE-01	ISUZU GK-4JG2NKFC01	XINCHAI 4D32X41	KUBOTA V2403-CR-TE5B	ISUZU 4JG2PE-01	ISUZU GK-4JG2NKFC01	XINCHAI 4D32X41	KUBOTA V2403-CR-TE5B	
6.02	Rated power/speed		kW/rpm	44.9/2450	35.0/2450	36.8/2500	42.6/2400	44.9/2450	35.0/2450	36.8/2500	42.6/2400	
6.03	Max. torque speed		Nm/rpm	186.3/1600~1800	170/1700	210/1600-1800	195.6/1500	186.3/1600~1800	170/1700	210/1600-1800	195.6/1500	
6.04	Cylinder number- bore * stroke		/L	4-95.4×107/3.059	4-95.4×107/3.059	4-98×105/3.168	4-87×102.4/2.434	4-95.4×107/3.059	4-95.4×107/3.059	4-98×105/3.168	4-87×102.4/2.434	
6.05	Emission			China Stage II	Euro Stage IIIA	China Stage IV	EU StageV / EPA Tier IV	China Stage II	Euro Stage IIIA	China Stage IV	EU StageV / EPA Tier IV	
6.06	Transmission gears (front/rear)			2-1Power Shift M/T				2-1Power Shift M/T				

	Manufacturer and Technical Data (3-3.5t Standard 4-wheel Drive)											
	Characteristics											
1.01	Manufacturer			HELI								
1.02	Model			CPCD30	CPCD30	CPCD30	CPCD30	CPCD35	CPCD35	CPCD35	CPCD35	
1.03	Configuration number			W3Y4G3(4WD)	W4Y4G3(4WD)	XC3Y4G3(4WD)	KU5Y4G3(4WD)	W3Y4G3(4WD)	W4Y4G3(4WD)	XC3Y4G3(4WD)	KU5Y4G3(4WD)	
1.04	Rated capacity		kg	3000				3500				
1.05	Load center distance		mm	500				500				
1.06	Power mode			Diesel				Diesel				
1.07	Driving mode			Seat-type				Seat-type				
	Weight											
2.01	Total weight		kg	5300				5500				
	Tyres											
3.01	Tyre type			Tubeless tyre				Tubeless tyre				
3.02	Wheel numbers front/rear(x=driven wheels)			2x/2				2x/2				
3.03	Tyre size, front			14-17.5-16TL				14-17.5-16TL				
3.04	Tyre size, rear			10-16.5-10TL				10-16.5-10TL				
	Dimensions											
4.01	Lifting height	H	mm	3000				3000				
4.02	Mast height (fork to the ground, vertical mast)	H1	mm	2265				2265				
4.03	Max. height, extended(with backrest)	H2	mm	4225				4225				
4.04	Free lifting height	H3	mm	160				160				
4.05	Height of overhead guard	H4	mm	2450				2450				
4.06	Min. ground clearance	H5	mm	280				280				
4.07	Height of backrest	H13	mm	1175				1175				
4.08	Overall length (with/without fork)	L/L'	mm	4144/3094				4184/3134				
4.09	Wheel base	L1	mm	2000				2000				
4.10	Front overhang	L2	mm	584				584				
4.11	Rear overhang	L3	mm	560				600				
4.12	Overall width	W1	mm	1640				1640				
4.13	Track width (front/rear)	W3	mm	1250/1280				1250/1280				
4.14	Adjustment range of fork (outside fork Max./Min.)	W5	mm	1395/250				1395/250				
4.15	Min. outside turning radius	r	mm	3550				3600				
4.16	Mast tilt angle (forward/backward)	α/β	°	10°/12°				10°/12°				
4.17	Fork size: thickness*width*length	TxWxL4	mm	45×125×1070				50×125×1070				
4.18	Min. right-angle aisle width	Ra	mm	3450				3500				
	Performance											
5.01	Travel speed (laden/unladen)		km/h	20/20				20/20				
5.02	Lift speed (laden/unladen)		mm/s	450/520				450/520				
5.03	Lowering speed (laden/unladen)		mm/s	370/350				370/350				
5.04	Max. drawbar pull (laden/unladen)		kN	38	34	38	38	38	34	38	38	
5.05	Max. gradeability (laden/unladen)		%	40	36	40	40	36	32	36	36	
	Combustion-Engine											
6.01	Engine manufacturer/Model			ISUZU 4JG2PE-01	ISUZU GK-4JG2NKFC01	XINCHAI 4D32X41	KUBOTA V2403-CR-TE5B	ISUZU 4JG2PE-01	ISUZU GK-4JG2NKFC01	XINCHAI 4D32X41	KUBOTA V2403-CR-TE5B	
6.02	Rated power/speed		kW/rpm	44.9/2450	35.0/2450	36.8/2500	42.6/2400	44.9/2450	35.0/2450	36.8/2500	42.6/2400	
6.03	Max. torque speed		Nm/rpm	186.3/1600~1800	170/1700	210/1600-1800	195.6/1500	186.3/1600~1800	170/1700	210/1600-1800	195.6/1500	
6.04	Cylinder number- bore * stroke		/L	4-95.4×107/3.059	4-95.4×107/3.059	4-98×105/3.168	4-87×102.4/2.434	4-95.4×107/3.059	4-95.4×107/3.059	4-98×105/3.168	4-87×102.4/2.434	
6.05	Emission			China Stage II	Euro Stage IIIA	China Stage IV	EU StageV / EPA Tier IV	China Stage II	Euro Stage IIIA	China Stage IV	EU StageV / EPA Tier IV	
6.06	Transmission gears (front/rear)			2-1Power Shift M/T				2-1Power Shift M/T				

RASA: Right angle stacking aisle (width)
a: Clearance
L4: Fork length

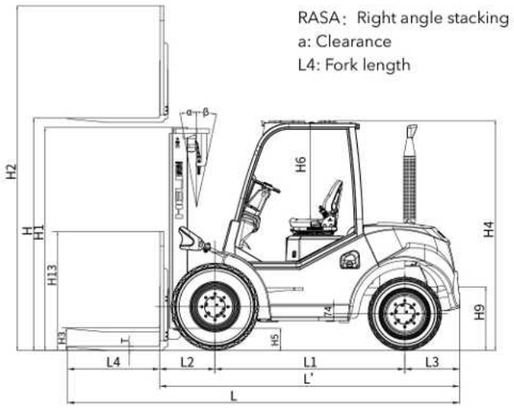

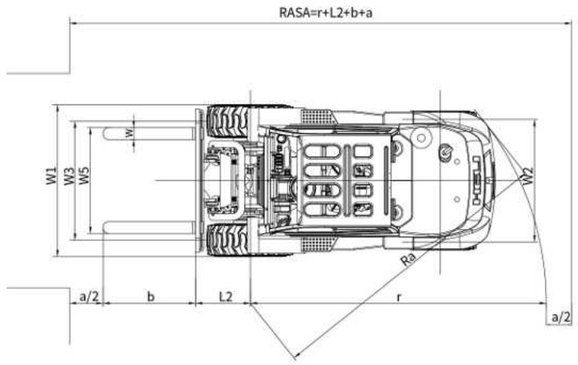

Load curve

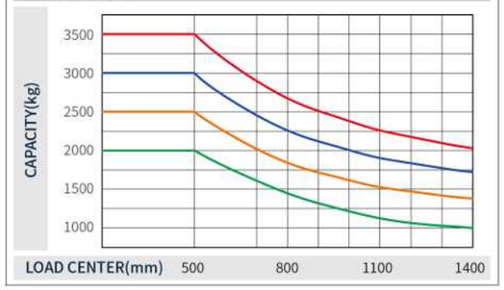

CPCD35 CPCD30 CPCD25 CPCD20

Note:The vertical axis stands for load capacity while the horizontal axis stands for load center which is calculated from the front surface of the forks to the gravity of the standard load. the standard load means a cubic with 1000mm edge length. When the mast is tilted forward, The worker using nonstandard forks for loading large goods, the load capacity will be reduced. The load capacity of standard mast at different load center can be known from this load chart.

Wide View Standard Mast

Mast model	Max. lifting height (mm)	Load capacity (load center is 500mm)(Kg)				Lowered mast height (mm)	Extended mast height (with backrest) (mm)		Free lift height (mm)	Service weight(kg)				Mast tilting angle (α/β) (deg.)
		CPCD20	CPCD25	CPCD30	CPCD35		2-2.5t	3-3.5t		CPCD20	CPCD25	CPCD30	CPCD35	
M200	2000	2000	2500	3000	3500	1765	3055	3200	150	4500	4750	5000	5200	10°/12°
M250	2500	2000	2500	3000	3500	2015	3555	3700	150	4560	4810	5060	5260	10°/12°
M300	3000	2000	2500	3000	3500	2265	4055	4200	150	4600	4850	5100	5300	10°/12°
M330	3300	2000	2500	3000	3500	2415	4355	4500	150	4660	4910	5160	5360	10°/12°
M350	3500	2000	2500	3000	3500	2515	4555	4700	150	4680	4930	5180	5380	10°/12°
M370	3700	2000	2500	3000	3500	2615	4755	4900	150	4690	4940	5190	5390	10°/12°
M400	4000	2000	2500	3000	3500	2815	5055	5200	150	4760	5010	5260	5460	10°/6°
M425	4250	1950	2200	2900	3500	2940	5305	5450	150	4780	5030	5280	5480	10°/6°
M450	4500	1850	2000	2900	3400	3065	5555	5700	150	4790	5040	5290	5490	10°/6°
M475	4750	1600	1800	2850	3350	3190	5805	5950	150	4840	5090	5340	5540	10°/6°
M500	5000	1500	1700	2600	3100	3315	6055	6200	150	4880	5130	5380	5580	5°/6°
M550	5500	1350	1450	2400	2900	3615	6555	6700	150	4970	5220	5470	5670	5°/6°
M600	6000	1200	1300	2000	2500	3865	7055	7200	150	5020	5270	5520	5720	5°/6°

Wide View Full Free 2-stage Mast

Mast model	Max. lifting height (mm)	Load capacity (load center is 500mm)(Kg)				Lowered mast height (mm)	Extended mast height (with backrest) (mm)		Free lift height (mm)	Service weight(kg)				Mast tilting angle (α/β) (deg.)
		CPCD20	CPCD25	CPCD30	CPCD35		2-2.5t	3-3.5t		CPCD20	CPCD25	CPCD30	CPCD35	
ZM200	2000	2000	2500	3000	3500	1765	3055	3200	565	4520	4770	5020	5220	10°/12°
ZM250	2500	2000	2500	3000	3500	2015	3555	3700	815	4580	4830	5080	5280	10°/12°
ZM300	3000	2000	2500	3000	3500	2265	4055	4200	1065	4620	4870	5120	5320	10°/12°
ZM330	3300	2000	2500	3000	3500	2415	4355	4500	1215	4680	4930	5180	5380	10°/12°
ZM350	3500	2000	2500	3000	3500	2515	4555	4700	1315	4700	4950	5200	5400	10°/12°
ZM370	3700	2000	2500	3000	3500	2615	4755	4900	1415	4710	4960	5210	5410	10°/12°
ZM400	4000	2000	2500	3000	3500	2815	5055	5200	1615	4780	5030	5280	5480	10°/6°
ZM425	4250	1950	2200	2900	3500	2940	5305	5450	1740	4800	5050	5300	5500	10°/6°
ZM450	4500	1850	2000	2900	3400	3065	5555	5700	1865	4810	5060	5310	5510	10°/6°
ZM475	4750	1600	1800	2850	3350	3190	5805	5950	1990	4860	5110	5360	5560	10°/6°
ZM500	5000	1500	1700	2600	3100	3315	6055	6200	2115	4900	5150	5400	5600	5°/6°
ZM550	5500	1300	1400	2400	2900	3615	6555	6700	2415	4990	5240	5490	5690	5°/6°
ZM600	6000	1100	1200	2000	2500	3865	7055	7200	2665	5040	5290	5540	5740	5°/6°

Wide View Full Free 3-stage Mast

Mast model	Max. lifting height (mm)	Load capacity (load center is 500mm)(Kg)				Lowered mast height (mm)	Extended mast height (with backrest) (mm)		Free lift height (mm)	Service weight(kg)				Mast tilting angle (α/β) (deg.)
		CPCD20	CPCD25	CPCD30	CPCD35		2-2.5t	3-3.5t		CPCD20	CPCD25	CPCD30	CPCD35	
ZSM360	3600	1900	2400	2800	3300	2015	4655	4800	815	4680	4930	5180	5390	10°/6°
ZSM400	4000	1900	2400	2800	3300	2165	5055	5200	965	4730	4980	5230	5430	10°/6°
ZSM435	4350	1900	2300	2800	3300	2265	5405	5550	1065	4800	5050	5300	5510	10°/6°
ZSM450	4500	1850	2150	2700	3200	2315	5555	5700	1115	4830	5080	5330	5540	10°/6°
ZSM470	4700	1750	1900	2500	3000	2375	5755	5900	1175	4850	5100	5350	5560	10°/6°
ZSM480	4800	1750	1900	2500	3000	2415	5855	6000	1215	4900	5150	5400	5610	10°/6°
ZSM500	5000	1600	1800	2400	2900	2515	6055	6200	1315	4970	5220	5470	5670	5°/6°
ZSM550	5500	1300	1500	2100	2900	2615	6455	6600	1415	5070	5320	5570	5770	5°/6°
ZSM600	6000	1000	1150	1750	2250	2815	7055	7200	1615	5130	5380	5630	5830	5°/6°

HELI smart fleet management system (optional)

- Vehicle positioning
- Vehicle management
- Remote diagnosis
- Identification recognition (optional)
- Remote monitoring
- Weight management (optional)
- Maintenance reminder
- Collision management (optional)
- Statistical form



G3 SERIES 5.0 t

Mast parameters

Mast type	Mast model	Max. lifting height (mm)	Load capacity (load center 500mm) (Kg)	Mast height (mm)			Free lifting height (with backrest) (mm)	Service weight (kg)	Mast tilting angle F/R (α/β) (deg.)
				Fork lowered	Fork extened (with backrest)	Fork extened (without backrest)			
Wide View Standard Mast	M220	2200	5000	2285	3567	3542	160	8896	15°/15°
	M250	2500	5000	2435	3867	3842	160	8934	15°/15°
	M270	2700	5000	2535	4067	4042	160	8961	15°/15°
	M300	3000	5000	2685	4367	4342	160	9000	15°/15°
	M330	3300	5000	2835	4667	4642	160	9039	15°/15°
	M350	3500	5000	2935	4867	4842	160	9065	15°/15°
	M375	3750	5000	3060	5117	5092	160	9098	15°/15°
	M400	4000	5000	3235	5367	5342	160	9231	15°/15°
	M425	4250	5000	3360	5617	5592	160	9263	15°/15°
	M450	4500	5000	3485	5867	5842	160	9296	15°/15°
	M475	4750	5000	3610	6117	6092	160	9329	15°/10°
	M500	5000	5000	3735	6367	6342	160	9362	15°/10°
	M550	5500	4750	4035	6867	6842	160	9526	15°/10°
	M600	6000	4400	4285	7367	7342	160	9592	15°/10°
Wide View Full Free 2-Stage Mast	ZM220	2200	5000	2285	3567	3577	858	8946	15°/15°
	ZM250	2500	5000	2435	3867	3877	1008	8984	15°/15°
	ZM270	2700	5000	2535	4067	4077	1108	9011	15°/15°
	ZM300	3000	5000	2685	4367	4377	1258	9050	15°/15°
	ZM330	3300	5000	2835	4667	4677	1408	9089	15°/15°
	ZM350	3500	5000	2935	4867	4877	1508	9115	15°/15°
	ZM375	3750	5000	3060	5117	5127	1633	9148	15°/15°
	ZM400	4000	5000	3235	5367	5377	1808	9281	15°/15°
	ZM425	4250	5000	3360	5617	5627	1933	9313	15°/15°
	ZM450	4500	5000	3485	5867	5877	2058	9346	15°/15°
	ZM475	4750	5000	3610	6117	6127	2183	9379	15°/10°
	ZM500	5000	5000	3735	6367	6377	2308	9412	15°/10°
	ZM550	5500	4750	4035	6867	6877	2608	9576	15°/10°
	ZM600	6000	4400	4285	7367	7377	2858	9642	15°/10°
Wide View Full Free 3-Stage Mast	ZSM360	3600	4500	2560	4967	4977	1133	9538	15°/10°
	ZSM400	4000	4500	2685	5367	5377	1258	9597	15°/10°
	ZSM435	4350	4500	2810	5717	5727	1383	9652	15°/10°
	ZSM450	4500	4500	2860	5867	5877	1433	9690	15°/10°
	ZSM480	4800	4500	2965	6167	6177	1538	9727	15°/10°
	ZSM500	5000	4500	3030	6367	6377	1603	9755	10°/10°
	ZSM540	5400	4200	3165	6767	6777	1738	9820	10°/10°
	ZSM550	5500	4100	3195	6867	6877	1768	9910	10°/10°
	ZSM600	6000	4000	3360	7367	7377	1933	10003	10°/10°

ANHUI HELI CO., LTD.
Add / No.668, FangXing Road, Hefei, China
Fax / +86-551-63639966
Tel / +86-551-63639068(America); 63639258(Europe);
63639358(Asia); 63662105(Africa & Middle East)

* Our products are subject to improvements and changes without notice.

Design&Print:Fokeli Printing 20231121

HELI

5.0 t

G3 series Internal Combustion Counterbalanced Rough Terrain Forklift Truck



www.helichina.com

Superior braking performance

- **Dedicated wet-type drive axle**
  Reliable braking, maintenance free, easy to handle various complex road conditions.
- **Dedicated steering drive axle**
  The truck has higher safety and stability, and is suitable for operations in mountainous areas, mining areas, and other areas with poor road environment.
- **Dedicated gearbox**
  Multi speed flexible-connected gearbox, balancing efficiency and performance.
- **Central parking brake**
  Low operating force, strong braking force.



5.0 t
G3 series
Internal Combustion
Counterbalanced
Rough Terrain Forklift Truck

Safe, reliable, and convenient maintenance



Ratchet type hand brake is reliable and has low operating force.



Front 3 and rear 1 electro-hydraulic reversing is convenient and reliable.



Equipped with two wheel drive/four wheel drive switching function, two wheel drive and four wheel drive can be switched at any time. It is convenient.



New LCD instrument with clear information display at a glance.



The hood has a large opening angle, greatly improving maintenance space.



Equipped with intake cap as standard, the intake method is more scientific and reliable.



Equipped with high exhaust as standard, which is humanized design, anti water spray and thermal insulation.

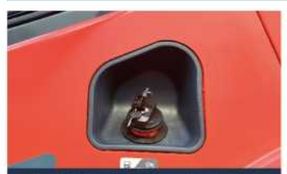

The oil filler is equipped with a lock, which is safe and reliable.



Anti slip boarding pedal is more beautiful and practical.

HELI合力

Manufacturer and Technical Data

	Characteristics			
1.01	Manufacturer			HELI
1.02	Model			CPCD50-CU1Y4G3
1.03	Rated capacity		kg	5000
1.04	Load center distance		mm	600
1.05	Power mode			Diesel
1.06	Driving mode			Seat-type
	Weight			
2.01	Total weight		kg	9000
	Wheels and tyres			
3.01	Tyre type			Tubeless
3.02	Wheels,number front/rear (x=driven wheels)			2x/2
3.03	Tyre size,front			445/65-22.5TL
3.04	Tyre size,rear			12.5/80-18TL
	Dimensions			
4.01	Lifting height (standard)	H	mm	3000
4.02	Height (mast lowered)	H1	mm	2685
4.03	Max. Lifting height, mast extended (with backrest)	H2	mm	4367
4.04	Free lifting height	H3	mm	160
4.05	Overall height (overhead guard)	H4	mm	2550
4.06	Min.Ground clearance (between mast)	H5	mm	385
4.07	Height of backrest(from the fork surface)	H13	mm	1370
4.08	Overall length (with/without fork)	L/L'	mm	4960/3740
4.09	Wheelbase(F/R)	L1	mm	2300
4.10	Front overhang	L2	mm	735
4.11	Rear overhang	L3	mm	720
4.12	Overall width	W1	mm	2130
4.13	Tread(front/rear)	W3	mm	1700/1800
4.14	Fork adjustment range (max./min. outside distance of fork)	W5	mm	2000/300
4.15	Min. Turning radius	r	mm	4560
4.16	Mast tilt angle (F/R)	α/β	°	15°/15°
4.17	Fork size:thickness x width x length	TxWxL4	mm	55x150x1220
4.18	Min.Right angle stacking aisle width for pallet	Ra	mm	5500
	Performance Data			
5.01	Travelling speed ,laden/unladen		km/h	30/32
5.02	Lifting speed ,laden/unladen		mm/s	480/520
5.03	Lowering speed ,laden/unladen		mm/s	370/350
5.04	Max. drawbar pull,laden		kN	123
5.05	Max. gradeability,laden		%	65
	Transmission			
6.01	Transmission geers (front/rear)			3-1 Power shifting M/T
	Combustion-engine			
7.01	Engine manufacturer/Model			CUMMINS F3.8
7.02	Rated power/Speed		kW/rpm	90/2200
7.03	Max. torque/Speed		Nm/rpm	500/1500
7.04	Cylinder number-bore x stroke Engine displacement		/L	4-102x115/3.8
7.05	Emission			Euro V

