ANHUI HELI CO., LTD.
Add / No.668, FangXing Road, Hefei, China
Fax / +86-551-63639966
Tel / +86-551-63639068(America); 63639258(Europe); 63639358(Asia);
63662105(Africa & Middle East); 63639530(Overseas Marketing)

* Our products are subject to improvements and changes without notice.

LinkedIn YouTube Facebook

Design&Print:Fokell Printing 20220507

HELI合力

CPCD 200-460

G2 Series
Balance Weight Type Forklift



■ www.heliforklift.net

Our Strength

Anhui Heli Co. Ltd. , a core holding subsidiary of the forklift group, was listed in Shanghai Stock Exchange in 1996 and it is registered capital is 616.8 million. It is presently an industrial vehicle research and development, manufacturing and export base in China with large scale, complete product line and industrial chain and strong overall strength.

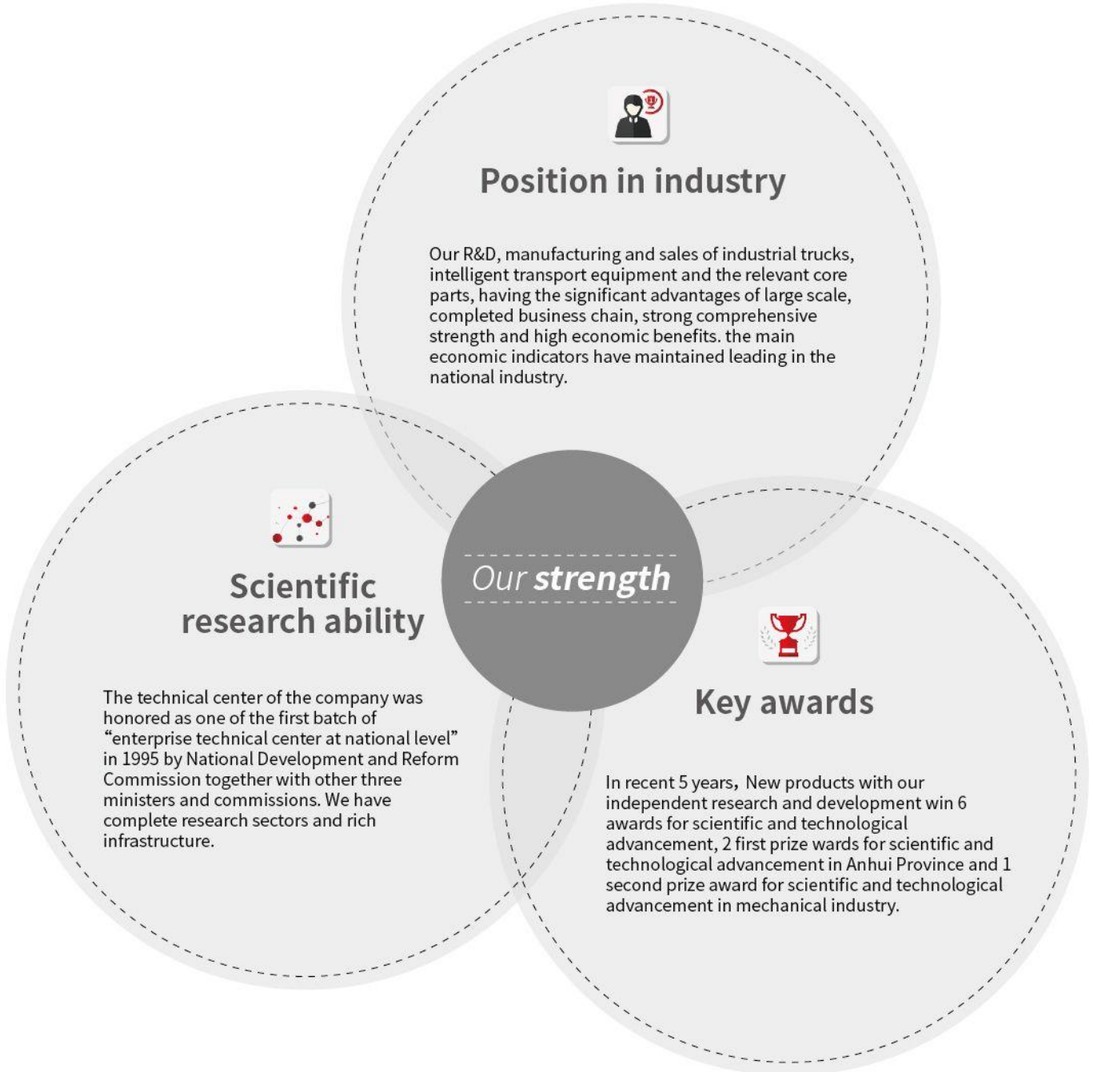

HELI

HELI around the world

HELI ranked top 10 among the world industrial truck sector in 2006 and top 8 from 2011. HELI has autonomous sales network and sound service system with 24 provincial sales network and more than 400 second level dealers in domestic and in overseas, HELI sets up sales network in more than 80 countries and regions and our products sell to 150 countries and regions over the world In the next five years, Heli will vigorously promote the international operation and create a global famous brand.

Brand concept

With being world top 5 as the short-term goal, HELI is committed to be a world advanced and over-lasting enterprise. Centennial HELI is our definition in thought and world top 5 is our quantized goal. HELI people work steadily and keep forging ahead to make our enterprise bigger and stronger. HELI has gone to a fast developing time since the new century. In 2006, HELI ranked world top 10. Now, we make our decision to be world top 5 which is not only a heritage of our glorious history but also our never-ending hard effort.

Heavy machine manufacturing base

Based on HELI strong scientific research platform and manufacturing ability, HELI research and develop, produce and sale heavy trucks, reach stacker and empty container handler with completed series and various types to provide customers with special material handling solutions.
Heavy truck: 12t-18t、20-25t、28-32t、35t、38-40t、42-46t
Reach stacker: standard type reach stacker, heavy type reach stacker
Container handler :2-3 layer, 5-6 layer, 7-8 layer

A. Enduring and durable

A.1 Durable structure design

Mast CAE analysis

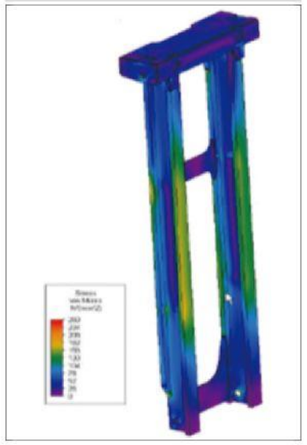

Application of high strength plate

Bend and forming parts largely improving strength and rigidity

Special mould ensuring accurate control on dimensions

Box-type anti-twist frame CAE analysis

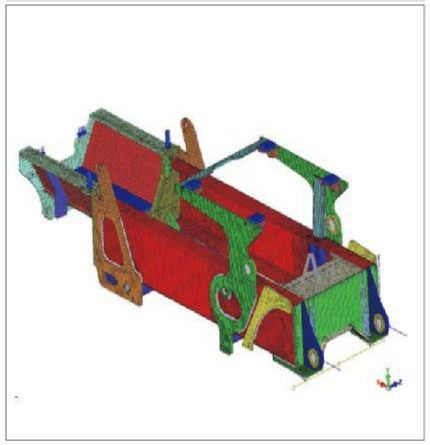

A.2 Easy and high efficient daily inspection

▸ Tilting cab

Automatic tilting system facilitates interior maintenance; Hydraulic drives tilting cylinder with electric assistance making cab tilt 60°right ward which makes maintenance easy.

▸ Engine hood with large opening angle

Open type engine hood which can be open through two self-lock spring ensures easy and high efficient maintenance.



HELI



▸ Removable cab

The position of the removable cab can be adjusted front and rear, with a wide field of vision and easy maintenance.

▸ Sliding Engine Hood

Sliding engine hood for maximum maintenance space.

▸ Easy liquid adding and check

Cooling liquid adding and check, engine oil adding and check and hydraulic oil level check become easier.

▸ Easy air cleaner filter replacement

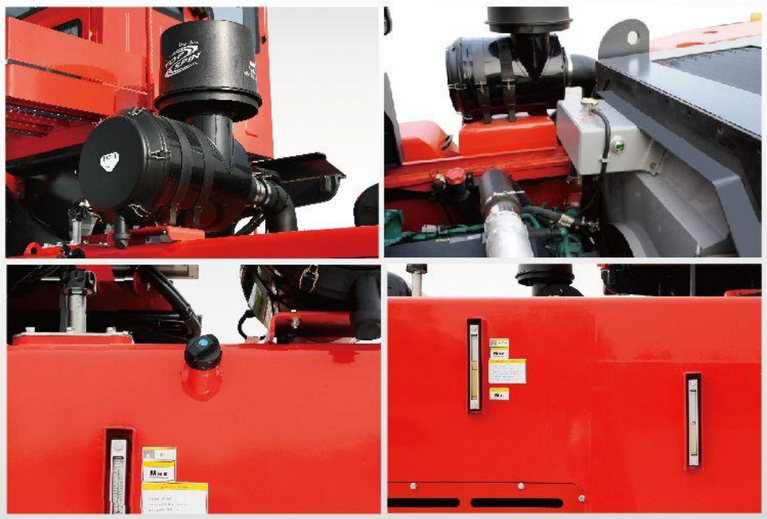

A3 Improved protection performance

- Oil cylinder protection sleeve
- Electric tilting button with high dust-proof and water-proof degree
- Front axle dust proof vent
- Transmission box dust proof vent



■ Oil cylinder protection sleeve(optional): it is used to protect cylinder damaged from foreign matters



■ Electric tilting button with high dust-proof and water-proof degree: protecting degree:IP67

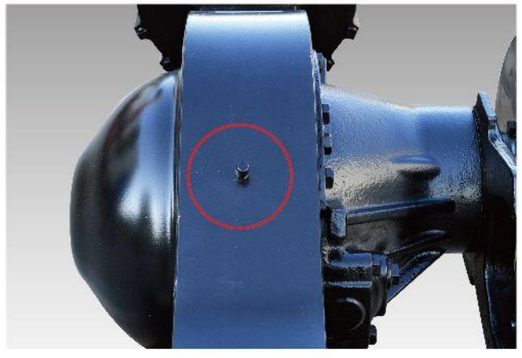

■ Front axle dust proof vent

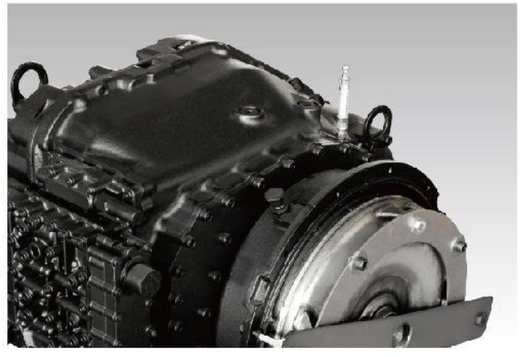

■ Transmission box dust proof vent

- Dust-proof sleeve for electric cabinet
- Steel wire winded hoses are used and safety level is improved greatly.
- Dust-proof waterproof connectors
- Harness meets German standard

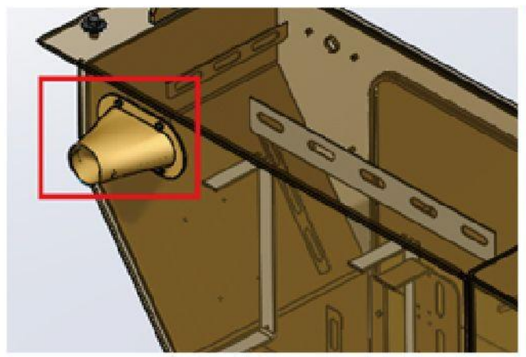

■ Dust-proof sleeve for electric cabinet



■ Steel wire winded hoses are used and safety level is improved greatly.

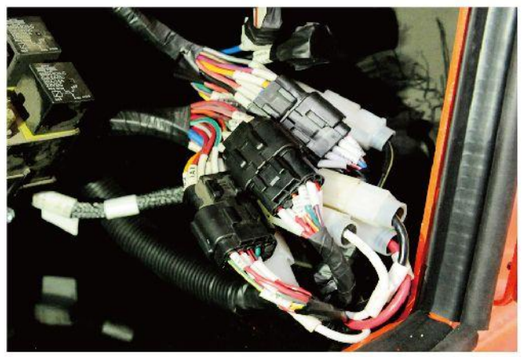

■ Dust-proof waterproof connectors: protective class IP65

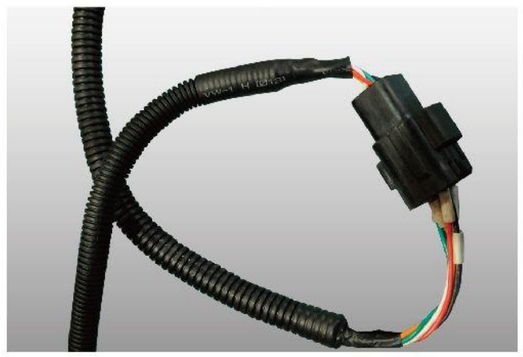

■ Harness meets German standard and its temperature resistance ability is largely improved (-40°C-105°C)

A.4 Improved cooling efficiency

Optimal designed channel
HELI special cooling medium
Engine original fan





- **Optimal designed channel**
  Optimal designed radiator and channel make cooling system have small resistance, avoid air flowing back effectively and improve cooling efficiency.

- **Engine original fan (38-46t)**
  Good matching ability, stable working, large cooling power



- **High strength aluminum radiator**
  High strength fin type structure will not deform or crack easily.
  Exterior injection molding treatment---anti-corrosion and oxidation resistance

B. ENERGY-SAVING

B.1 High efficient matching, forceful power

- VOLVO engine, meeting EU Stage V/T4F/China Stage IV,ZF or DANA transmission box are assembled on the truck.











B.2 Hydraulic dynamic load variable control system

- It can adjust oil pump displacement automatically according to operator habit and load condition to achieve high precision flow control and energy saving.
  Constant displacement system has simple structure, mature technology, reliablesystem and low cost.

B.3 Light type design

- Rear counter weight has no air channel and counter weight use ratio is 5% increased and thus truck service weight is reduced.
- Light type design optimizes structure and the truck is lighter and more stable.



- **Light type design**
  Application of high strength material
  Years of data accumulation and accurate CAE analysis
  Constant structure optimization

C. COMFORTABLE AND CONVENIENT

C.1 Easy get on-off

- **Anti-skid pedal**
  Anti-slip aluminum pedals, with good rust and corrosion resistance, provide excellent anti-slip performance for entering and exiting the cab.performance.
  Auxiliary handrail
  Solid and durable

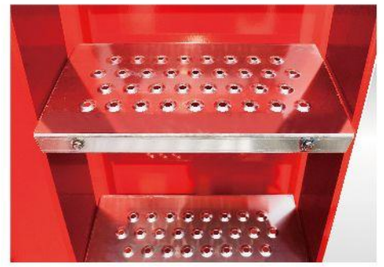

- **Large getting on off pedal and handrail**
  Open type steps make easy and safe get on-off.



C.2 Smaller turning radius

- Compact frame design
  Optimized steering angle

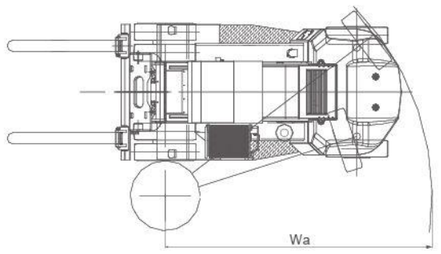

C.3 Superior view



▶ **Superior front view**
Front glass with large arc is used and front view field angle is 10° increased.



▶ **Superior top view**
Large glass is used on the top of cab.

▶ **Glass for left and right side window**
4 pieces of glass is used on left and right door to ensure 360°view.

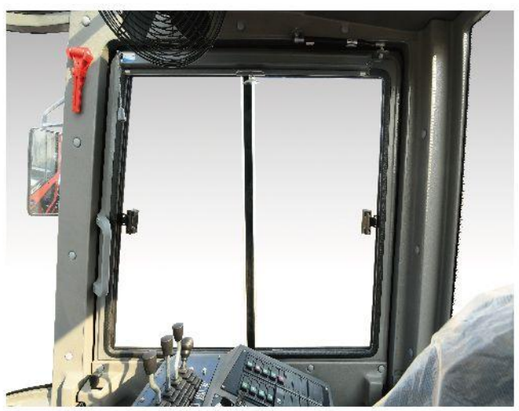



▶ **Superior rear view**
Large glass is used at the rear end of cab.



▶ **Rear vision system**
Truck real time rear view can be displayed when backward.



▶ **Front view check**
Rear view check

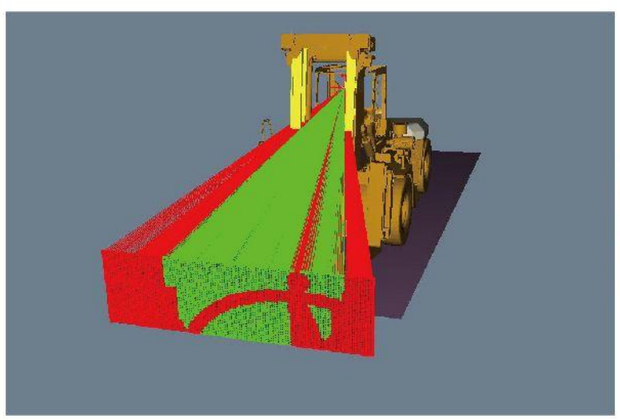

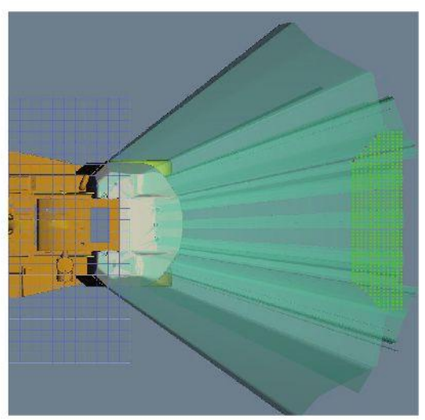

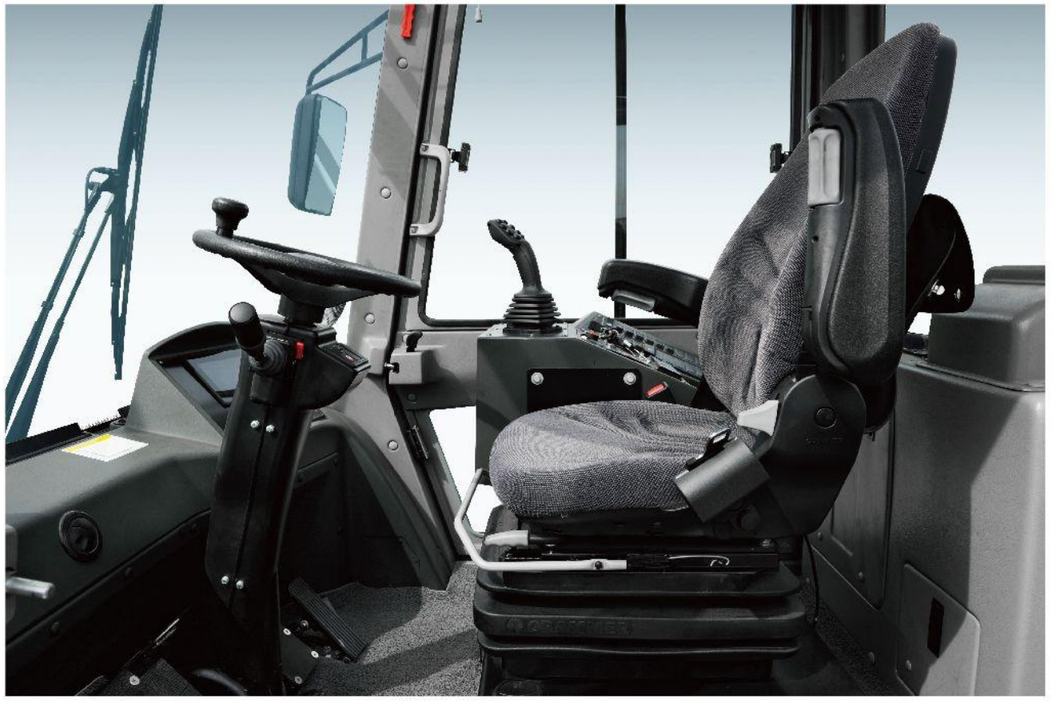

C.4 More comfort driving experience

Special cab with 360° view

Ergonomic	Ergonomic	Fully suspension seat, moveable dashboard, easy to reach operation
Panoramic	Wide view	360° view
Exclusive	Dedicated space	The truck has 20% enlarged driving space and reduced noise through multiple technologies. USB, radio, printer and air conditioner are optional to meet your needs.





- **Fully suspension seat**
  Adjustable damping shock reducing design not only bears your weight but also provides steady driving experience.

- **Weighting system(optional)**
  Weight can be measured accurately through checking hydraulic pressure.



- **Backward radar**
  Six probes ensure driving safety.
  Monitor is achieved through reasonable distributed 6 points.
  Larger monitoring range



- **Truck working monitoring and condition display meter**
  Ergonomic optimized layout makes reading and operation easy.



- **Pedal optimized layout**
  Optimized pedal reduces fatigue during long time working.



- **Adjustable steering wheel**
  Steering wheel can be adjusted according to operator habit and easy and flexible steering largely reduces your work.



- **Flexible control knob**
  Accurate, safe and effective control can be achieved through small operation force.



- **Aviation integrated handle**
  Aviation integrated handle, with small operation force and high precision and safety.

D. SAFE AND EFFICIENT

D.1 Better reliability

- **Smaller front overhang**
  Retroposition of center of gravity
  More compact mast structure

- **Retroposition of center of gravity**
  Retroposition of power system
  Retroposition of cooling sytem
  No air channel on the balance weight



D.2 OPS

- **OPS for the whole truck**
  Truck power will be cut automatically and the truck can not be operated when operator is away from seat.
- **OPS system for mast**
  The mast is locked and can not be operated when operator is away from seat.





D.3 Wet type drive axle

- **Maintenance free**
  Specially designed structure and brake principle provides anti-dust and anti-water function and saves your maintenance cost.
- **Safe and reliable brake**
  Working requirements such as Long time, high duty, short distance or frequent brake can be satisfied.

HELI

E. Technical parameter

Technical parameters											
Model	Unit	CPCD200	CPCD250	CPCD280	CPCD300	CPCD320	CPCD350	CPCD380	CPCD400	CPCD420	CPCD460
Rated load	kg	20000	25000	28000	30000	32000	35000	38000	40000	42000	46000
The mass	kg	33600	36900	39000	41000	43000	46000	49700	51250	54600	56600
Maximum lifting speed (loaded/unloaded)	mm/s	270/310	270/310	250/300	250/300	250/300	230/245	240/320	240/320	240/320	240/320
Maximum speed (loaded/unloaded)	km/h	22/24	22/24	22/24	22/24	22/24	22/24	23/26	23/26	23/26	23/26
Gradeability (loaded)(2km/h)	%	20	20	20	20	20	20	20	20	20	20

Size parameters												
Model		Unit	CPCD200	CPCD250	CPCD280	CPCD300	CPCD320	CPCD350	CPCD380	CPCD400	CPCD420	CPCD460
Overall length	L		8742	8742	9202	9202	9202	9202	10370	10370	10370	10370
Overall width	W	mm	3040	3040	3460	3460	3460	3460	4120	4120	4120	4120
Overall height	H	mm	3995	3995	4120	4120	4120	4120	4600	4600	4830	4830
Load center distance	L1	mm	1200	1200	1200	1200	1200	1200	1200	1200	1200	1200
Wheelbase	L2	mm	4250	4250	4650	4650	4650	4650	5500	5500	5500	5500
Front overhang	L3	mm	1102	1102	1162	1162	1162	1162	1270	1270	1270	1270
Rear overhang	L4	mm	990	990	990	990	990	990	1160	1160	1160	1160
Minimum underground clearance	H2	mm	280	280	275	275	275	275	350	350	350	350
Seat height	H4	mm	2590	2590	2590	2590	2590	2590	2620	2620	2620	2620
The turning radius	R1	mm	775	775	824	824	824	824	936	936	936	936
Turning radius(outside)	R2	mm	5920	5920	6395	6395	6395	6395	7518	7518	7518	7518
Front track	W1	mm	2200	2200	2490	2490	2490	2490	3090	3090	3090	3090
Rear track	W2	mm	2510	2510	2440	2440	2440	2440	2840	2840	2840	2840
Mast height (retracted/extended)	H/H1	mm	3995/5995	3995/5995	4120/6120	4120/6120	4120/6120	4120/6120	4600/6600	4600/6600	4830/6830	4830/6830
Mast lifting height	H3	mm	4000	4000	4000	4000	4000	4000	4000	4000	4000	4000
Mast tilting angle (forward/backward)	α/β	deg	6/10	6/10	6/10	6/10	6/10	6/10	6/10	6/10	6/10	6/10
Fork dimension (length*width*thickness)		mm	2440×250×112	2440×250×112	2440×300×115	2440×300×115	2440X300X115	2440X300X120	2440×300×135	2440×300×135	2440×300×145	2440×300×145
Fork adjusting range (Outside of Fork)		mm	820-2700	820-2700	920-2850	920-2850	920-2850	920-2850	950-2850	950-2850	950-2850	950-2850

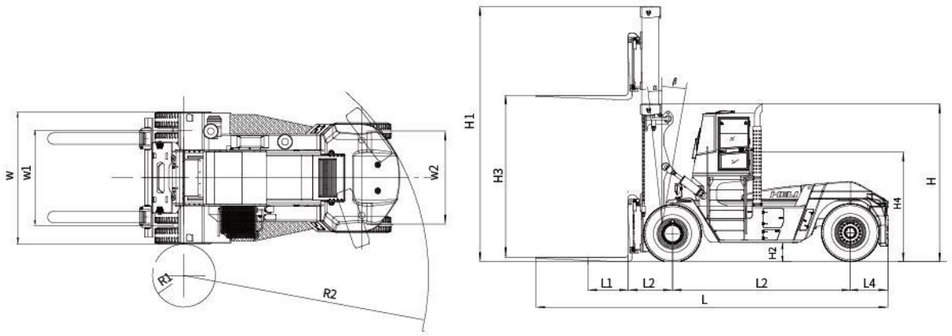

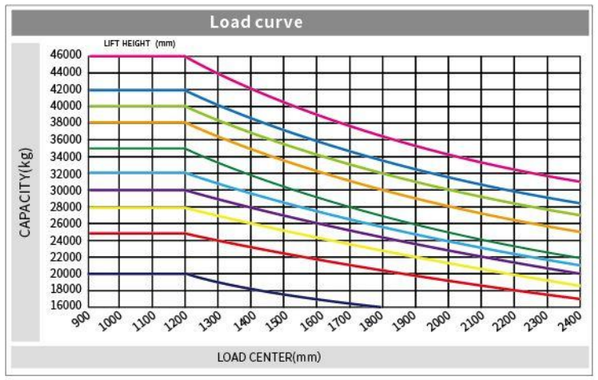

Note:
Load center is measured from the fork front. A standard load center point refers to the center of a cubic of side length of 2400mm. When gantry tilts forward, the bearing capacity will reduce in case of use of non-standard fork or loading a load exceeding the normal width,. Load curve tells you bearing capacity of various load centers in time.

CPCD200-250 Wide view mast

Mast name	Max.fork Height (mm)	Overall height (mm)	Max.mast height(mm)	Tilt angle(α/β)(°)	Remarks
M400	4000	3995	5995	6/10	Standard equipment
M450	4500	4245	6495	6/10	
M500	5000	4495	6995	6/10	
M550	5500	4745	7495	6/10	
M600	6000	4995	7995	6/10	
M650	6500	5245	8495	6/10	
M700	7000	5495	8995	6/10	
M750	7500	5745	9495	6/10	
M800	8000	5995	9995	6/10	

CPCD280-350 Wide view mast

Mast name	Max.fork Height (mm)	Overall height (mm)	Max.mast height(mm)	Tilt angle(α/β)(°)	Remarks
M400	4000	4120	6120	6/10	Standard equipment
M450	4500	4370	6620	6/10	
M500	5000	4620	7120	6/10	
M550	5500	4870	7620	6/10	
M600	6000	5120	8120	6/10	
M650	6500	5370	8620	6/10	
M700	7000	5620	9120	6/10	
M750	7500	5870	9620	6/10	
M800	8000	6120	10120	6/10	

CPCD380-400 Wide view mast

Mast name	Max.fork Height (mm)	Overall height (mm)	Max.mast height(mm)	Tilt angle(α/β)(°)	Remarks
M400	4000	4600	6535	6/10	Standard equipment
M450	4500	4850	7035	6/10	
M500	5000	5100	7535	6/10	
M550	5500	5350	8035	6/10	
M600	6000	5600	8535	6/10	
M650	6500	5850	9035	6/10	
M700	7000	6100	9535	6/10	
M750	7500	6350	10035	6/10	
M800	8000	6600	10535	6/10	

CPCD420-460 Wide view mast

Mast name	Max.fork Height (mm)	Overall height (mm)	Max.mast height(mm)	Tilt angle(α/β)(°)	Remarks
M400	4000	4830	6830	6/10	Standard equipment
M450	4500	5080	7330	6/10	
M500	5000	5330	7830	6/10	
M550	5500	5580	8330	6/10	
M600	6000	5830	8830	6/10	
M650	6500	6080	9330	6/10	
M700	7000	6330	9830	6/10	
M750	7500	6580	10330	6/10	
M800	8000	6830	10830	6/10	

Note: Duplex full free mast is optional.

- Our products are constantly updated and improved. Parameters and design are subject to change without prior notice.
- The configuration and color of the products in figures may be different from the actual delivered model. Please in kind prevails.

HELI

F. Configurations

Vehicle configuration											
	Forklift truck model	CPCD200 -V1Z-12G2	CPCD250 -V1Z-12G2	CPCD280 -V1Z-12G2	CPCD300 -V1Z-12G2	CPCD320 -V1Z-12G2	CPCD350 -V1Z-12G2	CPCD380 VDG2-12	CPCD400 VDG2-12	CPCD420 -V1D-12G2	CPCD460 -V1D-12G2
Engine	Brand	VOLVO	VOLVO	VOLVO	VOLVO	VOLVO	VOLVO	VOLVO	VOLVO	VOLVO	VOLVO
	Model	TAD881VE	TAD881VE	TAD881VE	TAD881VE	TAD881VE	TAD881VE	TAD1181VE	TAD1181VE	TAD1181VE	TAD1181VE
	Rated output (kW/RPM)	185/2200	185/2200	185/2200	185/2200	185/2200	185/2200	265/2100	265/2100	265/2100	265/2100
	Peak torque (Nm/RPM)	1160/1350	1160/1350	1160/1350	1160/1350	1160/1350	1160/1350	1785/1316	1785/1316	1785/1316	1785/1316
	Emission standards	EU Stage V/T4F/China Stage IV									
	Emission Technology Route	DOC+DPF+SCR	DOC+DPF+SCR	DOC+DPF+SCR	DOC+DPF+SCR	DOC+DPF+SCR	DOC+DPF+SCR	DOC+DPF+SCR	DOC+DPF+SCR	DOC+DPF+SCR	DOC+DPF+SCR
Tank	Fueltank(L)	340	340	360	360	360	360	450	450	450	450
	Hydraulic oil tank(L)	310	310	320	320	320	320	460	460	460	460
	Brake oil tank(L)	110	110	110	110	110	110	120	120	120	120
	Urea tank (L)	25	25	25	25	25	25	45	45	45	45
Transmission	model	ZF3WG211	ZF3WG211	ZF3WG211	ZF3WG211	ZF3WG211	ZF3WG211	DANA TE27	DANA TE27	DANA TE27	DANA TE27
Drive axle	model	Kessler	Kessler	Kessler	Kessler	Kessler	Kessler	Kessler	Kessler	Kessler	Kessler
Tire	size	14.00-24	14.00-24	16.00-25	16.00-25	16.00-25	16.00-25	18.00-25	18.00-25	18.00-25	18.00-25
Supporting configuration	Reversing radar	●	●	●	●	●	●	●	●	●	●
	Reversing image	●	●	●	●	●	●	●	●	●	●
	Weighing system	○	○	○	○	○	○	○	○	○	○
	The vehicle ops	●	●	●	●	●	●	●	●	●	●
	The door frame ops	●	●	●	●	●	●	●	●	●	●
The hydraulic system	Quantitative system	／	／	／	／	／	／	／	／	／	／
	Variable system	●	●	●	●	●	●	●	●	●	●
Airconditioning options	Air conditioning	●	●	●	●	●	●	●	●	●	●
	Used by air conditioning	○	○	○	○	○	○	○	○	○	○
Tyre options	Pneumatic tyre, Vacuum tyre	●	●	●	●	●	●	●	●	●	●
	Solid tyre	○	○	○	○	○	○	○	○	○	○
	Solid tyre (front), pneumatic tyre (rear)	○	○	○	○	○	○	○	○	○	○
	Pneumatic tyre (front), solid tyre (rear)	○	○	○	○	○	○	○	○	○	○
Cab	Removable cab	／	／	／	／	／	／	●	●	●	●
	Tilting cab	●	●	●	●	●	●	／	／	／	／

●-Standard item ○-Optional item ／-Not used

G. Configuration

Optional attachments



- **Side shifting fork positioner (standard)**
  It has both space adjusting and side shifting functions to improving working efficiency.



- **Fork extension**
  It effectively extends fork and it is suitable for large size handling.



- **Carpet boom**
  It is suitable for roll type goods such as steel roll, wire roll and so on.



- **Crane jib**
  It is safe and high efficient to lift goods.



- **Slings**
  It is suitable for goods in bundle such as rebar, steel tube and so on.

HELI smart fleet management system

- Vehicle positioning
- Remote diagnosis
- Remote monitoring
- Maintenance reminder
- Statistical form
- Vehicle management
- Identification recognition (optional)
- Weight management (optional)

