Electric powered forklift 48V

B3

3 wheel

B3

B3-Li

CESAB

www.cesab-forklifts.eu

Electric powered forklift 1.5 - 1.6 t

IDENTIFICATION							
1.1	Manufacturer			CESAB	CESAB	CESAB	CESAB
1.2	Model			B3-15	B3-16	B3-16L	B3-16-Li
1.3	Drive			Electric	Electric	Electric	Electric
1.4	Operator type			Rider seated	Rider seated	Rider seated	Rider seated
1.5	Load capacity/rated load	Q	kg	1500	1600	1600	1600
1.6	Load centre	c	mm	500	500	500	500
1.8	Load distance, centre of drive axle to fork	x	mm	317	317	317	317
1.9	Wheelbase	y	mm	1305	1413	1521	1413
WEIGHT							
2.1	Service weight		kg	2974	3009	2985	3095
2.2	Axle load, with load, front/rear		kg	3907/567	4061/548	4037/548	3836/542
2.3	Axle load, without load, front/rear		kg	1468/1506	1536/1473	1578/1407	1311/1467
TYRES							
3.1	Tyre - pneumatic (P), pneumatic shaped cushion (SE), solid rubber (R)			SE	SE	SE	SE
3.2	Tyre size, front			18x7-8	18x7-8	18x7-8	18x7-8
3.3	Tyre size, rear			15x4.1/2x8	15x4.1/2x8	15x4.1/2x8	15x4.1/2x8
3.5	Wheels, number front/rear (x = driven wheels)			2x/2	2x/2	2x/2	2x/2
3.6	Track width, front	b_{10}	mm	905	905	905	905
3.7	Track width, rear	b_{11}	mm	185	185	185	185
DIMENSIONS							
4.1	Tilt of mast/fork carriage forward/backward	α/β	deg	5/7	5/7	5/7	5/7
4.2	Height, mast lowered	h_1	mm	2120	2120	2120	2120
4.3	Free lift	h_2	mm	115	115	115	115
4.4	Lift	h_3	mm	3300	3300	3300	3300
	Lift height	h_{23}	mm	3335	3335	3335	3335
4.5	Height, mast extended	h_4	mm	3870	3870	3870	3870
4.7	Height of overhead guard (cab)	h_6	mm	2055	2055	2055	2055
4.8	Seat height/stand height	h_7	mm	1065	1065	1065	1065
4.12	Coupling height	h_{10}	mm	550	550	550	550
4.19	Overall length	l_1	mm	2772	2880	2988	2880
4.20	Length to face of forks	l_2	mm	1772	1880	1988	1880
4.21	Overall width	b_1	mm	1060	1060	1060	1060
4.22	Fork dimensions	s/e/l	mm	35/100/1000	35/100/1000	35/100/1000	35/100/1000
4.23	Fork carriage DIN 15 173, class/type A, B			IIA	IIA	IIA	IIA
4.24	Fork-carriage width	b_3	mm	920	920	920	920
4.31	Ground clearance, with load, below mast	m_1	mm	80	80	80	80
4.32	Ground clearance, centre of wheelbase	m_2	mm	81	81	81	93
4.33	Aisle width for pallets 1000x1200 crossways	A_{st}	mm	3102	3210	3318	3210
4.35	Aisle width for pallets 800x1200 lengthways	A_{st}	mm	3223	3331	3440	3331
4.35	Turning radius	W_a	mm	1455	1563	1671	1563
4.36	Internal turning radius	b_{13}	mm	0	0	0	0
PERFORMANCE DATA							
5.1	Travel speed, with/without load		km/h	16/16	16/16	16/16	16/16
5.2	Lift speed, with/without load Standard | Performance		m/s	0,45/0,61 | 0,54/0,75	0,43/0,61 | 0,54/0,75	0,43/0,61 | 0,54/0,75	0,43/0,61 | 0,54/0,75
5.3	Lowering speed, with/without load		m/s	0,58/0,57	0,58/0,57	0,58/0,57	0,58/0,57
5.5	Drawbar pull, with/without load S2-60'		N	6966	6982	6982	7656
5.6	Max. drawbar pull, with/without load		N	12237	12266	12266	13450
5.7	Gradeability, with/without load		%	17,6/28	17/27,7	17,1/28	20,1/34,1
5.8	Max. gradeability, with/without load		%	24,9/40,3	24,1/39,8	24,3/40,2	28,6/38,2
5.9	Acceleration time, with/without load		s	4,5/4,1	4,6/4,2	4,6/4,2	4,6/4,2
5.10	Service brake			Hydraulic	Hydraulic	Hydraulic	Hydraulic

ELECTRIC MOTOR						
6.1	Drive motor rating S2 60 min	kW	6,6x2	6,6x2	6,6x2	6,6x2
6.2	Lift motor rating S3 15% Standard | Performance	kW	11 | 12,5	11 | 12,5	11 | 12,5	11 | 12,5
6.3	Battery acc. to DIN 43 531/35/36 A, B, C, no		43 531A	43 531A	43 531A	no
6.4	Battery voltage, nominal capacity K_5	V/Ah	48/420-460-500	48/525-575-625	48/630-690-750	48/300-420
6.5	Battery weight	kg	708	856	1013	240
6.6	Energy consumption acc. to EN16796 Standard	kWh/h	3,5	3,7	3,6	3,6
6.6	Energy consumption acc. to EN16796 Performance	kWh/h	3,3	3,6	3,4	3,6

OTHER						
8.1	Type of drive control		inverter MOSFET	inverter MOSFET	inverter MOSFET	inverter MOSFET
8.2	Operating pressure for attachments	bar	183	183	183	183
8.3	Oil volume for attachments	l/min	42	42	42	42
8.4	Sound level at the driver's ear according to EN12053	dB(A)	65,8	65,8	65,8	65,8

All data are based on table configuration. Other configurations may give other values.
Truck performance and dimensions are nominal and subject to tolerances.
Products and specifications are subject to change without notice.

Mast dimensions and rated capacities

Model			Duplex NFL (V)							Duplex FFL (FV)				Duplex FFL (FW)-IMD				Triplex FFL (FSV)						Triplex FFL (FSW)-IMD								
B3-15/B3-16/B3-16-Li	Lift height	h_{23}	3035	3335	3535	3735	4035	4535	5035	3035	3335	3535	3735	3035	3335	3535	3735	4335	4535	4735	5035	5535	6035	4335	4535	4735	5035	5535	6035	6535	7035	7535
	Lift	h_3	3000	3300	3500	3700	4000	4500	5000	3000	3300	3500	3700	3000	3300	3500	3700	4300	4500	4700	5000	5500	6000	4300	4500	4700	5000	5500	6000	6500	7000	7500
	Height, mast lowered	h_1	1970	2120	2220	2380	2570	2820	3070	1970	2120	2220	2380	2000	2150	2250	2350	1970	2040	2120	2220	2380	2570	1970	2040	2120	2220	2380	2570	2820	3070	3320
	Height, mast extended [1]	h_4	3570	3870	4070	4270	4570	5070	5570	3580	3880	4080	4280	3555	3855	4055	4255	4845	5045	5245	5545	6045	6545	4845	5045	5245	5545	6045	6545	7045	7545	8045
	Height, mast extended [2]	h_4	4220	4520	4720	4920	5220	5270	6220	4220	4520	4720	4920	4220	4520	4720	4920	5520	5720	5920	6220	6720	7220	5520	5720	5920	6220	6720	7220	7720	8220	8720
	Free lift, without load backrest	h_2	80	80	80	80	80	80	80	1430	1580	1680	1840	1440	1590	1690	1790	1460	1530	1610	1710	1870	2060	1460	1530	1610	1710	1870	2060	2250	2450	2650
	Free lift, with load backrest	h_2	80	80	80	80	80	80	80	750	900	1000	1160	780	930	1030	1130	750	820	900	1000	1160	1350	760	830	930	1030	1230	1380	1580	1780	1980

1) Without load backrest
2) With load backrest; Height of standard load backrest is 1220 mm.

Pneumatic shaped cushion tyre			Duplex NFL (V)							Duplex FFL (FV)				Duplex FFL (FW)-IMD				Triplex FFL (FSV)						Triplex FFL (FSW)-IMD								
B3-15	Tilt range, forward	deg	5	5	5	5	5	5	5	5	5	5	5	5	5	5	5	5	5	5	5	5	5	5	5	5	5	5	5	5	5	5
	Tilt range, backward	deg	7(5)	7(5)	7(5)	7(5)	7(5)	7(5)	7(5)	7(5)	7(5)	7(5)	7(5)	7(5)	7(5)	7(5)	7(5)	7(5)	7(5)	7(5)	7(5)	5	5	7(5)	7(5)	7(5)	7(5)	7(5)	5	5	5	5
	Load capacity at 500 mm LC	kg	1500	1500	1500	1500	1500	1500	1500	1500	1500	1500	1500	1500	1500	1500	1500	1500	1500	1500	1500	1450	1100	1500	1500	1500	1500	1375	1300	900	700	525
B3-16	Tilt range, forward	deg	5	5	5	5	5	5	5	5	5	5	5	5	5	5	5	5	5	5	5	5	5	5	5	5	5	5	5	5	5	5
	Tilt range, backward	deg	7(5)	7(5)	7(5)	7(5)	7(5)	7(5)	7(5)	7(5)	7(5)	7(5)	7(5)	7(5)	7(5)	7(5)	7(5)	7(5)	7(5)	7(5)	7(5)	7(5)	7(5)	7(5)	7(5)	7(5)	7(5)	7(5)	5	5	5	7(5)
	Load capacity at 500 mm LC	kg	1600	1600	1600	1600	1600	1600	1600	1600	1600	1600	1600	1600	1600	1600	1600	1600	1600	1600	1585	1450	950	1600	1600	1600	1600	1510	1350	1050	750	600
B3-16L B3-16-Li	Tilt range, forward	deg	5	5	5	5	5	5	5	5	5	5	5	5	5	5	5	5	5	5	5	5	5	5	5	5	5	5	5	5	5	5
	Tilt range, backward	deg	7(5)	7(5)	7(5)	7(5)	7(5)	7(5)	7(5)	7(5)	7(5)	7(5)	7(5)	7(5)	7(5)	7(5)	7(5)	7(5)	7(5)	7(5)	7(5)	7(5)	5	7(5)	7(5)	7(5)	7(5)	7(5)	5	5	5	7(5)
	Load capacity at 500 mm LC	kg	1600	1600	1600	1600	1600	1600	1600	1600	1600	1600	1600	1600	1600	1600	1600	1600	1600	1600	1600	1600	1200	1600	1600	1600	1600	1600	1500	1175	875	650

Data in ( ) are for when "Cabin Series" is selected (minimum front windshield).

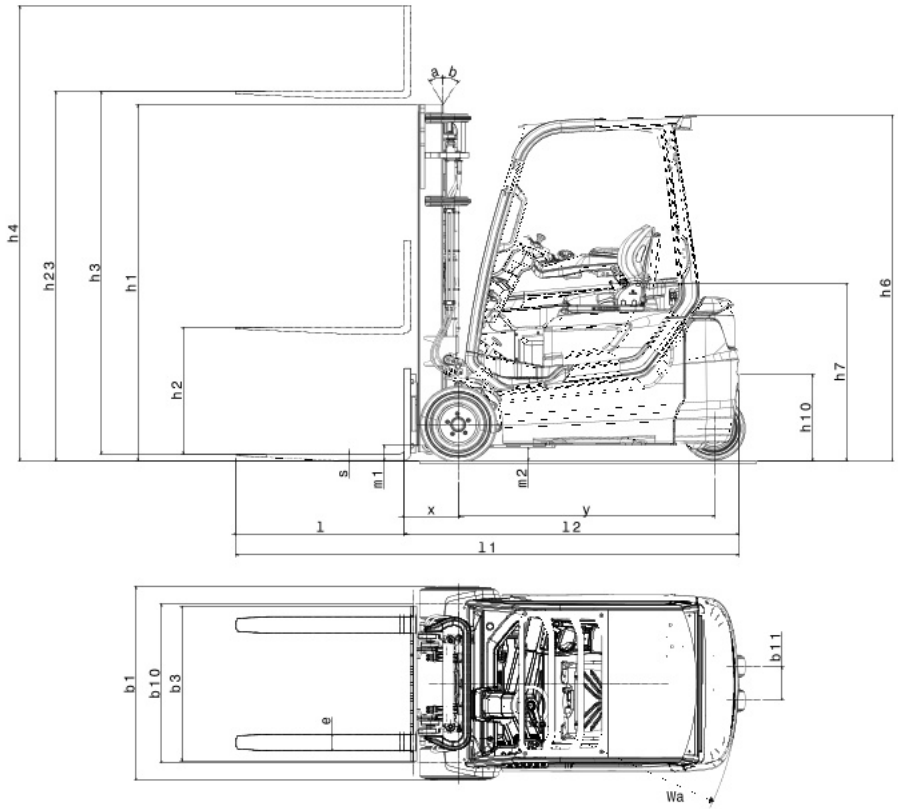

Electric powered forklift 1.8 t

IDENTIFICATION					
1.1	Manufacturer			CESAB	CESAB
1.2	Model			B3-18	B3-18L
1.3	Drive			Electric	Electric
1.4	Operator type			Rider seated	Rider seated
1.5	Load capacity/rated load	Q	kg	1800	1800
1.6	Load centre	c	mm	500	500
1.8	Load distance, centre of drive axle to fork	x	mm	317	317
1.9	Wheelbase	Y	mm	1413	1521
WEIGHT					
2.1	Service weight			3134	3109
2.2	Axle load, with load, front/rear			4301/583	4351/558
2.3	Axle load, without load, front/rear			1540/1594	1584/1525
TYRES					
3.1	Tyre - pneumatic (P), pneumatic shaped cushion (SE), solid rubber (R)			SE	SE
3.2	Tyre size, front			18x7-8	18x7-8
3.3	Tyre size, rear			140/55-9	140/55-9
3.5	Wheels, number front/rear (x = driven wheels)			2x/2	2x/2
3.6	Track width, front	b_{10}	mm	905	905
3.7	Track width, rear	b_{11}	mm	193	193
DIMENSIONS					
4.1	Tilt of mast/fork carriage forward/backward	α/β	deg	5/7	5/7
4.2	Height, mast lowered	h_1	mm	2120	2120
4.3	Free lift	h_2	mm	115	115
4.4	Lift	h_3	mm	3300	3300
	Lift height	h_{23}	mm	3335	3335
4.5	Height, mast extended	h_4	mm	3870	3870
4.7	Height of overhead guard (cab)	h_6	mm	2055	2055
4.8	Seat height/stand height	h_7	mm	1065	1065
4.12	Coupling height	h_{10}	mm	550	550
4.19	Overall length	l_1	mm	2880	2988
4.20	Length to face of forks	l_2	mm	1880	1988
4.21	Overall width	b_1	mm	1060	1060
4.22	Fork dimensions	s/e/l	mm	35/100/1000	35/100/1000
4.23	Fork carriage DIN 15 173, class/type A, B			IIA	IIA
4.24	Fork-carriage width	b_3	mm	920	920
4.31	Ground clearance, with load, below mast	m_1	mm	80	80
4.32	Ground clearance, centre of wheelbase	m_2	mm	81	81
4.33	Aisle width for pallets 1000x1200 crossways	A_{st}	mm	3210	3318
4.34	Aisle width for pallets 800x1200 lengthways	A_{st}	mm	3331	3440
4.35	Turning radius	W_a	mm	1563	1671
4.36	Internal turning radius	b_{13}	mm	0	0
PERFORMANCE DATA					
5.1	Travel speed, with/without load		km/h	16/16	16/16
5.2	Lift speed, with/without load Standard | Performance		m/s	0,42/0,61 | 0,52/0,75	0,42/0,61 | 0,52/0,75
5.3	Lowering speed, with/without load		m/s	0,58/0,57	0,58/0,57
5.5	Drawbar pull, with/without load		N	7016	7016
5.6	Max. drawbar pull, with/without load		N	12325	12325
5.7	Gradeability, with/without load		%	15,8/26,6	15,9/26,8
5.8	Max. gradeability, with/without load		%	22,5/38,2	22,6/38,5
5.9	Acceleration time, with/without load		s	4,7/4,3	4,7/4,3
5.10	Service brake			Hydraulic	Hydraulic

ELECTRIC MOTOR				
6.1	Drive motor rating S2 60 min	kW	6,6x2	6,6x2
6.2	Lift motor rating S3 15% Standard | Performance	kW	11 | 12,5	11 | 12,5
6.3	Battery acc. to DIN 43 531/35/36 A, B, C, no		43 531A	43 531A
6.4	Battery voltage, nominal capacity K_5	V/Ah	48/525-575-625	48/630-690-750
6.5	Battery weight	kg	856	1013
6.6	Energy consumption acc. to EN16796 Standard	kWh/h	3,8	3,8
6.6	Energy consumption acc. to EN16796 Performance	kWh/h	3,6	3,6
OTHER				
8.1	Type of drive control		inverter MOSFET	inverter MOSFET
8.2	Operating pressure for attachments	bar	183	183
8.3	Oil volume for attachments	l/min	42	42
8.4	Sound level at the driver's ear according to EN 12053	dB(A)	65,8	65,8

All data are based on table configuration. Other configurations may give other values.
Truck performance and dimensions are nominal and subject to tolerances.
Products and specifications are subject to change without notice.

Mast dimensions and rated capacities

Model			Duplex NFL (V)							Duplex FFL (FV)				Duplex FFL (FW)-IMD				Triplex FFL (FSV)						Triplex FFL (FSW)-IMD								
B3-18/B3-18L	Lift height	h_{23}	3035	3335	3535	3735	4035	4535	5035	3035	3335	3535	3735	3035	3335	3535	3735	4335	4535	4735	5035	5535	6035	4335	4535	4735	5035	5535	6035	6535	7035	7535
	Lift	h_3	3000	3300	3500	3700	4000	4500	5000	3000	3300	3500	3700	3000	3300	3500	3700	4300	4500	4700	5000	5500	6000	4300	4500	4700	5000	5500	6000	6500	7000	7500
	Height, mast lowered	h_1	1970	2120	2220	2380	2570	2820	3070	1970	2120	2220	2380	2000	2150	2250	2350	1970	2040	2120	2220	2380	2570	1970	2040	2120	2220	2380	2570	2820	3070	3320
	Height, mast extended [1]	h_4	3570	3870	4070	4270	4570	5070	5570	3580	3880	4080	4280	3555	3855	4055	4255	4845	5045	5245	5545	6045	6545	4845	5045	5245	5545	6045	6545	7045	7545	8045
	Height, mast extended [2]	h_4	4220	4520	4720	4920	5220	5270	6220	4220	4520	4720	4920	4220	4520	4720	4920	5520	5720	5920	6220	6720	7220	5520	5720	5920	6220	6720	7220	7720	8220	8720
	Free lift, without load backrest	h_2	80	80	80	80	80	80	80	1430	1580	1680	1840	1440	1590	1690	1790	1460	1530	1610	1710	1870	2060	1430	1500	1600	1700	1900	205 0	2250	2450	2650
	Free lift, with load backrest	h_2	80	80	80	80	80	80	80	1430	1580	1680	1840	1440	1590	1690	1790	1460	1530	1610	1710	1870	2060	1460	1530	1610	1710	1870	2060	2250	2450	2650

1) Without load backrest
2) With load backrest; Height of standard load backrest is 1220 mm.

Pneumatic shaped cushion tyre			Duplex NFL (V)							Duplex FFL (FV)				Duplex FFL (FW)-IMD				Triplex FFL (FSV)						Triplex FFL (FSW)-IMD								
B3-18	Tilt range, forward	deg	5	5	5	5	5	5	5	5	5	5	5	5	5	5	5	5	5	5	5	5	5	5	5	5	5	5	5	5	5	5
	Tilt range, backward	deg	7(5)	7(5)	7(5)	7(5)	7(5)	7(5)	7(5)	7(5)	7(5)	7(5)	7(5)	7(5)	7(5)	7(5)	7(5)	7(5)	7(5)	7(5)	7(5)	5	5	7(5)	7(5)	7(5)	7(5)	7(5)	5	5	5	5
	Load capacity at 500 mm LC	kg	1800	1800	1800	1800	1800	1800	1800	1800	1800	1800	1800	1800	1800	1800	1800	1800	1800	1800	1650	1500	1125	1800	1800	1800	1800	1550	1400	1050	800	600
B3-18L	Tilt range, forward	deg	5	5	5	5	5	5	5	5	5	5	5	5	5	5	5	5	5	5	5	5	5	5	5	5	5	5	5	5	5	5
	Tilt range, backward	deg	7(5)	7(5)	7(5)	7(5)	7(5)	7(5)	7(5)	7(5)	7(5)	7(5)	7(5)	7(5)	7(5)	7(5)	7(5)	7(5)	7(5)	7(5)	7(5)	7(5)	5	7(5)	7(5)	7(5)	7(5)	7(5)	5	5	5	7(5)
	Load capacity at 500 mm LC	kg	1800	1800	1800	1800	1800	1800	1800	1800	1800	1800	1800	1800	1800	1800	1800	1800	1800	1800	1800	1500	1200	1800	1800	1800	1800	1630	1500	1200	890	700

Data in ( ) are for when "Cabin Series" is selected (minimum front windshield).

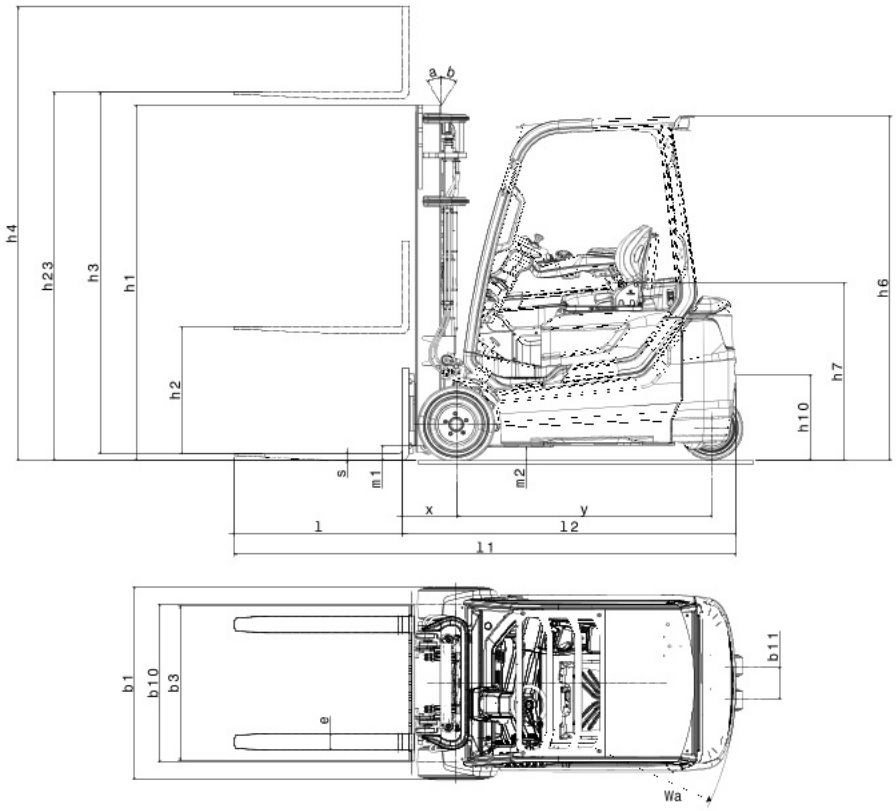

Electric powered forklift 2.0 t

IDENTIFICATION					
1.1	Manufacturer			CESAB	CESAB
1.2	Model			B3-20	B3-20-Li
1.3	Drive			Electric	Electric
1.4	Operator type			Rider seated	Rider seated
1.5	Load capacity/rated load	Q	kg	2000	2000
1.6	Load centre	c	mm	500	500
1.8	Load distance, centre of drive axle to fork	x	mm	317	317
1.9	Wheelbase	Y	mm	1521	1521
WEIGHT					
2.1	Service weight			3312	3095
2.2	Axle load, with load, front/rear			4715/597	4478/617
2.3	Axle load, without load, front/rear			1640/1672	1372/1723
TYRES					
3.1	Tyre - pneumatic (P), pneumatic shaped cushion (SE), solid rubber (R)			SE	SE
3.2	Tyre size, front			200/50-10	200/50-10
3.3	Tyre size, rear			140/55-9	140/55-9
3.5	Wheels, number front/rear (x = driven wheels)			2x/2	2x/2
3.6	Track width, front	b_{10}	mm	946	946
3.7	Track width, rear	b_{11}	mm	193	193
DIMENSIONS					
4.1	Tilt of mast/fork carriage forward/backward	α/β	deg	5/7	5/7
4.2	Height, mast lowered	h_1	mm	2120	2120
4.3	Free lift	h_2	mm	115	115
4.4	Lift	h_3	mm	3300	3300
	Lift height	h_{23}	mm	3335	3335
4.5	Height, mast extended	h_4	mm	3870	3870
4.7	Height of overhead guard (cab)	h_6	mm	2055	2055
4.8	Seat height/stand height	h_7	mm	1065	1065
4.12	Coupling height	h_{10}	mm	550	550
4.19	Overall length	l_1	mm	2988	2988
4.20	Length to face of forks	l_2	mm	1988	1988
4.21	Overall width	b_1	mm	1152	1152
4.22	Fork dimensions	s/e/l	mm	35/120/1000	35/120/1000
4.23	Fork carriage DIN 15 173, class/type A, B			IIA	IIA
4.24	Fork-carriage width	b_3	mm	920	920
4.31	Ground clearance, with load, below mast	m_1	mm	90	90
4.32	Ground clearance, centre of wheelbase	m_2	mm	81	93
4.33	Aisle width for pallets 1000x1200 crossways	A_{st}	mm	3318	3318
4.34	Aisle width for pallets 800x1200 lengthways	A_{st}	mm	3440	3440
4.35	Turning radius	W_a	mm	1671	1671
4.36	Internal turning radius	b_{13}	mm	0	0
PERFORMANCE DATA					
5.1	Travel speed, with/without load		km/h	16/16	16/16
5.2	Lift speed, with/without load Standard | Performance		m/s	0,38/0,54 | 0,44/0,64	0,38/0,54 | 0,44/0,64
5.3	Lowering speed, with/without load		m/s	0,52/0,5	0,52/0,5
5.5	Drawbar pull, with/without load		N	6757	7410
5.6	Max. drawbar pull, with/without load		N	11872	13017
5.7	Gradeability, with/without load		%	14/24,1	16,4/29,2
5.8	Max. gradeability, with/without load		%	19,9/34,4	23,3/35,4
5.9	Acceleration time, with/without load		s	4,7/4,3	4,7/4,3
5.10	Service brake			Hydraulic	Hydraulic

ELECTRIC MOTOR				
6.1	Drive motor rating S2 60 min	kW	6,6 x 2	6,6 x 2
6.2	Lift motor rating S3 15% Standard | Performance	kW	11 | 12,5	11 | 12,5
6.3	Battery acc. to DIN 43 531/35/36 A, B, C, no		43 531A	no
6.4	Battery voltage, nominal capacity K_5	V/Ah	48/630-690-750	48/300-420
6.5	Battery weight	kg	1013	240
6.6	Energy consumption acc. to EN16796 Standard	kWh/h	3,9	3,8
6.6	Energy consumption acc. to EN16796 Performance	kWh/h	3,7	3,7

OTHER				
8.1	Type of drive control		inverter MOSFET	inverter MOSFET
8.2	Operating pressure for attachments	bar	183	183
8.3	Oil volume for attachments	l/min	42	42
8.4	Sound level at the driver's ear according to EN 12053	dB(A)	65,8	65,8

All data are based on table configuration. Other configurations may give other values.
Truck performance and dimensions are nominal and subject to tolerances.
Products and specifications are subject to change without notice.

Mast dimensions and rated capacities

Model			Duplex NFL (V)							Duplex FFL (FV)				Duplex FFL (FW)-IMD				Triplex FFL (FSV)						Triplex FFL (FSW)-IMD								
B3-20/B3-20-Li	Lift height	h_{23}	3035	3335	3535	3735	4035	4535	5035	3035	3335	3535	3735	3035	3335	3535	3735	4335	4535	4735	5035	5535	6035	4335	4535	4735	5035	5535	6035	6535	7035	7535
	Lift	h_3	3000	3300	3500	3700	4000	4500	5000	3000	3300	3500	3700	3000	3300	3500	3700	4300	4500	4700	5000	5500	6000	4300	4500	4700	5000	5500	6000	6500	7000	7500
	Height, mast lowered	h_1	1970	2120	2220	2380	2570	2820	3070	1970	2120	2220	2380	2000	2150	2250	2350	1970	2040	2120	2220	2380	2570	1970	2040	2120	2220	2380	2570	2820	3070	3320
	Height, mast extended [1]	h_4	3570	3870	4070	4270	4570	5070	5570	3580	3880	4080	4280	3555	3855	4055	4255	4845	5045	5245	5545	6045	6545	4845	5045	5245	5545	6045	6545	7045	7545	8045
	Height, mast extended [2]	h_4	4220	4520	4720	4920	5220	5270	6220	4220	4520	4720	4920	4220	4520	4720	4920	5520	5720	5920	6220	6720	7220	5520	5720	5920	6220	6720	7220	7720	8220	8720
	Free lift, without load backrest	h_2	80	80	80	80	80	80	80	1430	1580	1680	1840	1440	1590	1690	1790	1460	1530	1610	1710	1870	2060	1460	1530	1610	1710	1870	2060	2250	2450	2650
	Free lift, with load backrest	h_2	80	80	80	80	80	80	80	750	900	1000	1160	780	930	1030	1130	750	820	900	1000	1160	1350	760	830	930	1030	1230	1380	1580	1780	1980

1) Without load backrest
2) With load backrest; Height of standard load backrest is 1220 mm.

Pneumatic shaped cushion tyre			Duplex NFL (V)							Duplex FFL (FV)				Duplex FFL (FW)-IMD				Triplex FFL (FSV)						Triplex FFL (FSW)-IMD								
B3-20 B3-20-Li	Tilt range, forward	deg	5	5	5	5	5	5	5	5	5	5	5	5	5	5	5	5	5	5	5	5	5	5	5	5	5	5	5	5	5	5
	Tilt range, backward	deg	7(5)	7(5)	7(5)	7(5)	7(5)	7(5)	7(5)	7(5)	7(5)	7(5)	7(5)	7(5)	7(5)	7(5)	7(5)	7(5)	7(5)	7(5)	7(5)	5	5	7(5)	7(5)	7(5)	7(5)	7(5)	5	5	5	5
	Load capacity at 500 mm LC	kg	2000	2000	2000	2000	2000	2000	1900	2000	2000	2000	2000	2000	2000	2000	2000	1950	1950	1900	1800	1650	1525	1950	1950	1900	1900	1900	1800	1250	950	750
B3-20-Li	Tilt range, forward	deg	5	5	5	5	5	5	5	5	5	5	5	5	5	5	5	5	5	5	5	5	5	5	5	5	5	5	5	5	5	5
	Tilt range, backward	deg	7(5)	7(5)	7(5)	7(5)	7(5)	7(5)	7(5)	7(5)	7(5)	7(5)	7(5)	7(5)	7(5)	7(5)	7(5)	7(5)	7(5)	7(5)	7(5)	5	5	7(5)	7(5)	7(5)	7(5)	7(5)	5	5	5	5
	Load capacity at 500 mm LC	kg	2000	2000	2000	2000	2000	2000	1900	2000	2000	2000	2000	2000	2000	2000	2000	1950	1950	1900	1800	1650	1530	1950	1950	1900	1900	1900	1800	1370	1050	750

Data in ( ) are for when "Cabin Series" is selected (minimum front windshield).

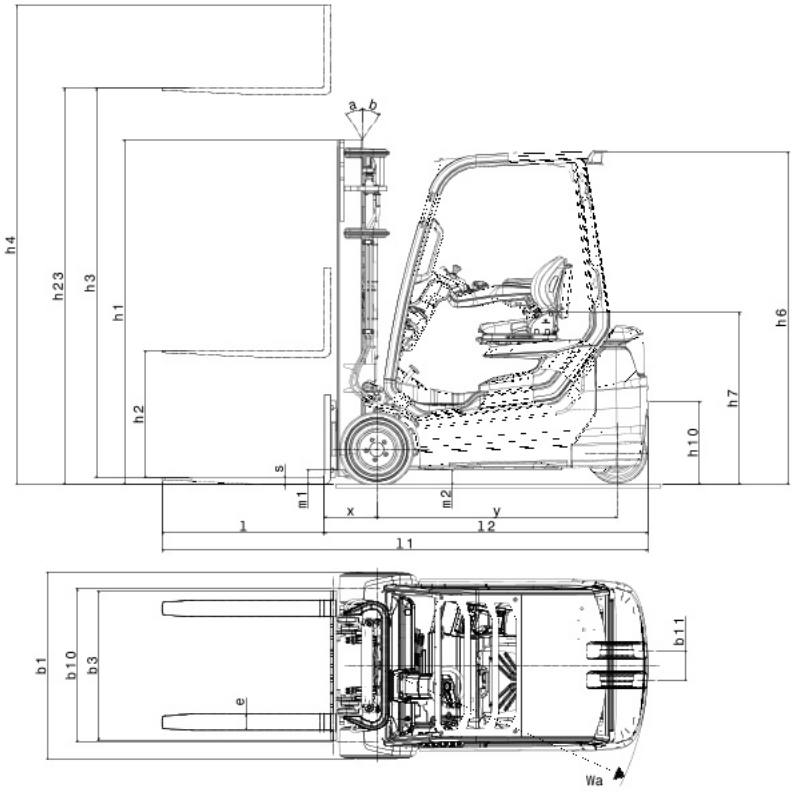

Standard equipments

- Cesab ISD (Intelligent Stability Design)
- StaminaTune from Cesab
- Wet disc brakes
- Automatic parking brake
- Electric new design steering and telescopic column
- Operator presence sensing system (OPS)
- ORS seat (Operator Restraint System)
- Seat mounted minilevers
- Wide visible mast (V3300 mm)
- Long forks (length:1000 mm)
- Long forkbar (length: 920 mm)
- 3 way valves (A400)
- Narrow brake pedal
- Pneumatic shaped cushion tyres
- Digital Multifunction display with wheel indicator
- Adjustable tilt steering column
- Full floating driver’s compartment
- Shockless landing lift
- Seatbelt lock recognition linked with OPS
- Orange seatbelt
- Battery door opening sensor (not available for Li-models)
- Remaining operating time indicator on main display

CMHE-CESAB MATERIAL HANDLING EUROPE - Version 1, 03-2025