CESAB S100 1.0 tonne

Powered Stacker Trucks



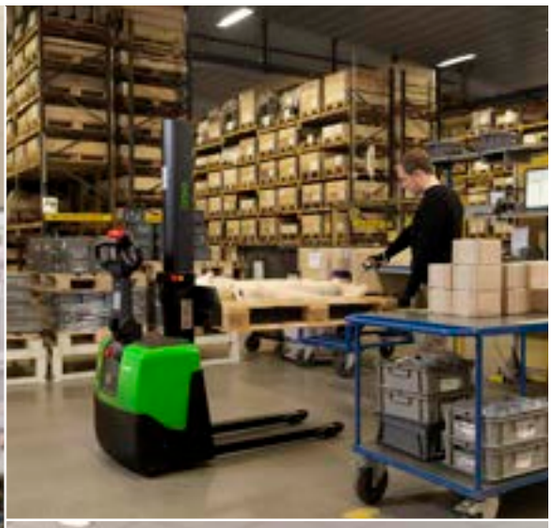



Truck Specifications

CESAB_S100_Spec sheet_016.indd 1 23/05/2018 13:34

CESAB S110 - S110S Truck Specifications

CHARACTERISTICS					
1.1	Manufacturer			CESAB	CESAB
1.2	Model			S110	S110S
1.3	Drive			Electric	Electric
1.4	Operator type			Pedestrian	Pedestrian
1.5	Load capacity/rated load	Q	[kg]	1000	1000
1.6	Load centre	c	[mm]	600	600
1.8	Load distance, centre of support arm wheel to face of forks	x	[mm]	805	800
1.9	Wheelbase	y	[mm]	1178	1210
WEIGHT					
2.1	Service weight including battery		[kg]	467	560
2.2	Axle load, with load, drive/castor/fork wheel		[kg]	353/151/963	580/-/515
2.3	Axle load, without load, drive/castor/fork wheel		[kg]	230/123/114	400/-/80
WHEELS					
3.1	Drive/castor/fork wheel			PU/PU/PU	PU/-/PU
3.2	Wheel size, front		[mm]	Ø250x60	Ø250x60
3.3	Wheel size, rear		[mm]	Ø85x77	Ø85x77
3.4	Additional wheels (dimensions)		[mm]	Ø100x40	-
3.5	Wheels, number front/rear (x=driven wheels)			2+1x/2	1x/2
3.6	Track width, front	b_{10}	[mm]	506	506
3.7	Track width, rear	b_{11}	[mm]	364	1000 -1400
DIMENSIONS					
4.2	Height, mast lowered	h_1	[mm]	1890	1890
4.4	Lift	h_3	[mm]	1495	1500
	Lift height	h_{23}	[mm]	1580	1540
4.5	Height, mast extended	h_4	[mm]	1890	2040
4.9	Height of tiller in neutral position	h_{14}	[mm]	858/1222	858/1222
4.15	Height, fork lowered	h_{13}	[mm]	85	50
4.19	Overall length	l_1	[mm]	1680	1722
4.20	Length to face of forks	l_2	[mm]	530	572
4.21	Overall width	b_1/b_2	[mm]	700	700/1100 -1500
4.22	Fork dimensions	s/e/l	[mm]	60/180/1150	40/100/1150
4.25	Width over forks	b_5	[mm]	550	250-800
4.26	Distance between support arms	b_4	[mm]	-	900 -1300
4.27	Support arm width	b_{14}	[mm]	-	100
4.31	Ground clearance, below mast	m_1	[mm]	49	49
4.32	Ground clearance, centre of wheelbase	m_2	[mm]	26	26
4.34	Aisle width for pallets 800x1200 lengthways	A_{st}	[mm]	2100	2130
4.35	Turning radius	W_a	[mm]	1340	1365
PERFORMANCE DATA					
5.1	Travel speed, with/without load		[km/h]	4.5/5.5	4.5/5.5
5.2	Lift speed, with/without load		[m/s]	0.12/0.21	0.10/0.19
5.3	Lowering speed, with/without load		[m/s]	0.15/0.14	0.15/0.14
5.8	Max. gradeability, with/without load [1)]		[%]	6/10	6/10
5.10	Service brake			Electromagnetic	Electromagnetic
ELECTRIC MOTOR					
6.1	Drive motor rating S2 60 min		[kW]	0.7	0.7
6.2	Lift motor rating at S3 11%		[kW]	1.2	1.2
6.4	Battery voltage/nominal capacity K_5		[V/Ah]	2x12/63	2x12/63
6.5	Battery weight		[kg]	2x23	2x23
6.6	Energy consumption acc. to VDI cycle (with h23=1580mm / with h23=2000mm)		[kWh/h]	0.62 / 0.76	-
OTHERS					
8.1	Type of drive control			Variable AC	Variable AC
8.4	Sound level at the driver's ear according to EN 12 053		[dB(A)]	66	66

[1)] Measured according to company standard

All data are based on table configuration. Other configurations may give other values.
Truck performance and dimensions are nominal and subject to tolerances.
Specifications are subject to change without notice.

CESAB S110 - S110S Dimensional Drawings

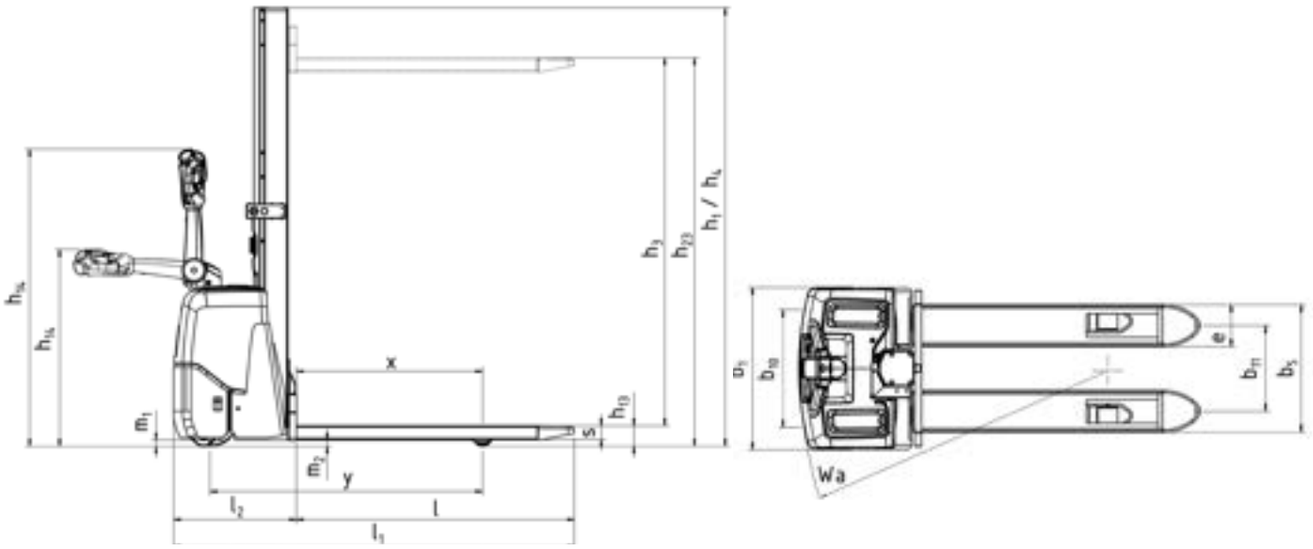

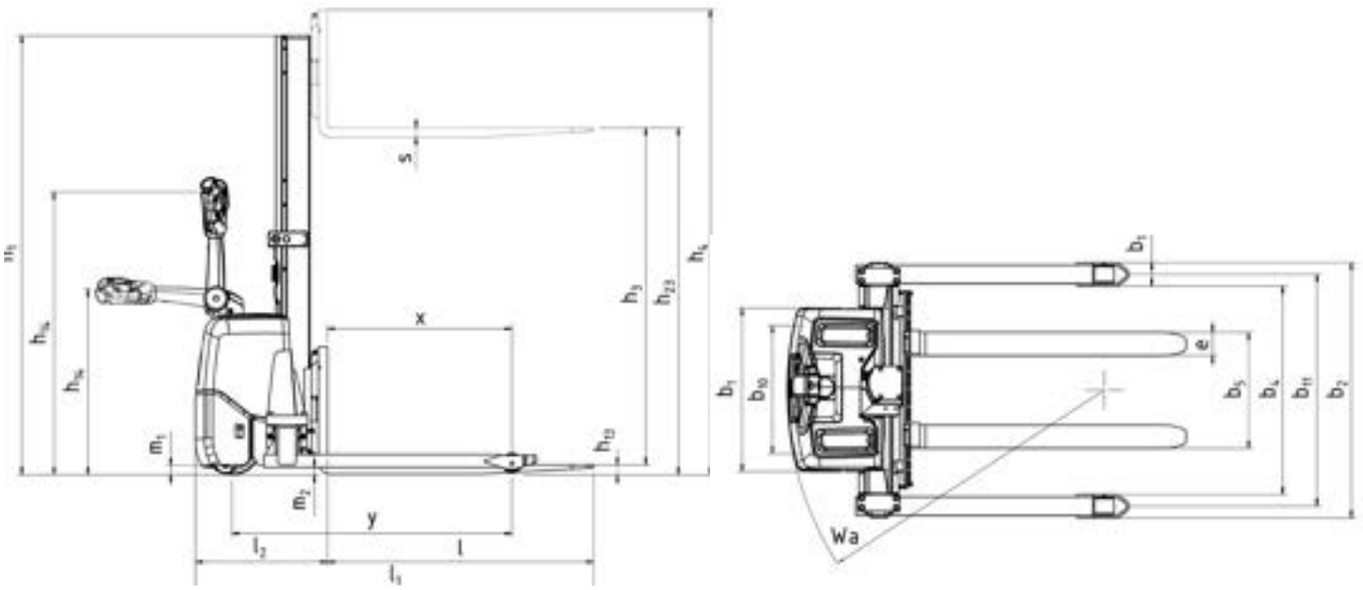

Mast Specifications

			S110			S110S		
h_{23}	Lift height (h_{13}+h_3)	[mm]	1180	1580	2000	1140	1540	1960
h_3	Lift	[mm]	1095	1495	1915	1100	1500	1920
h_1	Height, mast lowered	[mm]	1635	1890	2310	1635	1890	2310
h_4	Height, mast extended	[mm]	1635	1890	2310	1640	2040	2460

CESAB_S100_Spec sheet_016.indd 3 23/05/2018 13:34

The data in this specification sheet was determined based on our standard testing conditions. Operating performance may vary depending on the actual specification and condition of the truck as well as the condition of the operating area. Availability and specifications are determined regionally and are subject to change without notice. Please consult your authorised CESAB dealership for further details. SPEC_S100_EN_2017 / P&B S100 V16 – Copyright CESAB Material Handling Europe.

www.cesab-forklifts.eu

CESAB